STANDARD SPECIFICATIONS FOR WATER AND WASTEWATER CONSTRUCTION

DEPARTMENT OF PUBLIC WORKS
PORTLAND, TENNESSEE

FEBRUARY 2015

JACOBS

STANDARD SPECIFICATIONS FOR WATER AND WASTEWATER CONSTRUCTION

GEORGE B. FOWLER
REGISTERED ENGINEER
AGRICULTURE
COMMERCE
No. 111666
STATE OF TENNESSEE

02/02/15

DEPARTMENT OF PUBLIC WORKS
PORTLAND, TENNESSEE

JACOBS

PREFACE

The Standard Specifications have been prepared to complement the Standard Detail Drawings and to provide the qualitative requirements for products, materials and workmanship for construction of additions to and replacements of the water and wastewater system which is to be operated by the City of Portland (City). These Standard Specifications are only to be used for projects with Drawings which have been approved by the Tennessee Department of Environment and Conservation, Division of Water Pollution Control as prepared by the City, by its design consultant, or by a developer's engineer, whose Drawings must first be approved by the City. All references in these Standard Specifications to "Engineer" and "Owner" shall mean the City of Portland. These Standard Specifications are subject to revision for a specific project, with such revisions identified in the Bidding Requirements and Special Conditions document prepared by the City or its design consultant, or with such revisions noted on the Drawings approved by the City.

The City of Portland has the final determination as to the use of these standard specifications. Conditions may require additional specifications and materials not mentioned within.

WORK SITE SAFETY

The contractor has sole responsibility for work site safety. All laws and regulations by OSHA and TOSHA shall be followed and are the responsibility of the contractor.

SPECIFICATIONS

Section	Title
Division 01 - General Requirements	
01 57 13	Erosion and Sedimentation Control
Division 02 – Existing Conditions	
02 42 23	Removal of Existing Equipment and Piping
Division 31 - Earthwork	
31 11 00	Clearing and Grubbing
31 23 33	Trench Excavation and Backfill
Division 32 – Exterior Improvements	
32 10 13	Removing and Replacing Pavement
Division 33 - Utilities	
33 01 30	Subsurface Manhole Rehabilitation
33 05 23	Bore and Jack Casings
33 10 00	Water Mains and Accessories
33 12 13	Water Service Connections
33 30 00	Sewers and Accessories
33 30 10	Force Mains and Pressure Sewers
33 32 16	Submersible Sewage Pump Stations

GENERAL CONSTRUCTION DETAIL DRAWINGS

G-01	Silt Fence Detail
G-02	Concrete Encasement Detail
G-03	Trench Terminology Detail
G-04	Concrete Replacement Detail
G-05	Asphalt Replacement Detail
G-06	Pipe Bedding and Haunching Details (Class ‘A’, ‘B’, and ‘C’)
G-07	Pipe Bedding and Haunching Details (Type 5 and Special Conditions)
G-08	Casing Pipe and Concrete Protection for Streams or Large Drainage Channels

WASTEWATER DETAIL DRAWINGS

WW-01	Precast Concrete Manhole Detail
WW-02	Standard Manhole Detail
WW-03	Rubber Boot Detail
WW-04	Gravity Sewer Service Building Plumbing Connection Detail
WW-05	Gravity Sewer Service Stub-Out Detail
WW-06	Installation of Simplex Grinder Pump
WW-07	Force Main Dead-End Assembly – Mains 4” and Larger
WW-08	Traffic Area Cleanout
WW-09	Typical Pump Station Bypass Connection

WATER DETAIL DRAWINGS

W-01	¾” and 1” Short Tap Assemblies
W-02	2” Short Tap Assemblies
W-03	Typical Blocking Detail
W-04	Backflow Assembly
W-05	Dead-End Assembly
W-06	Fire Hydrant Detail
W-07	Gate Valve Installation Detail
W-08	Extension Stem Detail
W-09	¾” - 2” Air Release Valve Assemblies
W-10	4” to 8” Fire Service Meter Vault

Part 1 General

1.01 Scope

A. Submittals and Permits

1. Within 15 days after the date of the Notice to Proceed, the Contractor shall submit description, drawings and schedule for proposed temporary and permanent erosion and sedimentation controls to the local authority and Engineer. The description and drawings shall meet the requirements of the Tennessee Department of Environment & Conservation and local soil erosion and sedimentation control ordinances. The Contractor shall acquire Land Disturbance Permits from the appropriate authority and shall pay any fees for said permits. All fines imposed for improper erosion and sedimentation control shall be paid by the Contractor. A copy of the local soil erosion and sedimentation control ordinances is available from the Engineer.

2. Land disturbance activity shall not commence until the Land Disturbance Permit is issued. The Engineer will provide a reproducible drawing of plan sheets to the Contractor for Contractor's use. The reproducible will not bear the Engineer's seal or logo and is provided only for the Contractor's convenience in obtaining land disturbance permits.

3. Description and working drawings shall indicate controls which will ensure that storm water and drainage from the disturbed jobsite areas, which will be denuded, stripped or modified of its naturally existing or artificially established stabilization or protection against erosion, shall pass through some type of filter system before being discharged. These areas shall be kept sufficiently moist to control dust.

4. Submit a written plan for both temporary and permanent grassing. The plan shall include selection of species, dates and rates of application for seeding, fertilizer and mulching.

B. Basic Principles

1. The Contractor is responsible for inspecting and maintaining all existing erosion and sedimentation control measures.

2. Conduct the earthwork and excavation activities in such a manner to fit the topography, soil type and condition.

3. Minimize the disturbed area and the duration of exposure to erosion elements.

4. Stabilize disturbed areas immediately.

5. Safely convey run-off from the site to an outlet such that erosion will not be increased off site.

6. Retain sediment on site that was generated on site.

7. Minimize encroachment upon watercourses.

C. Implementation

1. The erosion and sedimentation control measures shown on the Drawings are minimal requirements. The Contractor's methods of operation may dictate additional erosion and sedimentation control measures not shown on the Drawings which shall be the Contractor's responsibility to determine and install said measures. The Contractor's failure to stabilize disturbed areas immediately following intermediate or final grading may dictate additional erosion and sedimentation control measures not shown on the Drawings which shall be the Contractor's responsibility to determine and install said measures.

2. The Contractor shall notify the Engineer of any changes and/or additions to the erosion and sedimentation control plan necessary to accommodate the Contractor's methods of operation. No additional payment shall be made for erosion and sedimentation control measures made necessary by the Contractor's methods of operation.

3. The Contractor shall be solely responsible for control of erosion within the Project site and prevention of sedimentation of any adjacent waterways.

4. The Contractor shall install controls which will ensure that stormwater and drainage from the disturbed area of the Project site shall pass through some type of filter system before being discharged. The filter system must meet the requirements of the Tennessee Department of Environment & Conservation.

D. Temporary Erosion and Sedimentation Control: In general, temporary erosion and sedimentation control procedures shall be directed toward:

1. Preventing soil erosion at the source.

2. Preventing silt and sediment from entering any waterway if soil erosion cannot be prevented.

3. Preventing silt and sediment from migrating downstream in the event it cannot be prevented from entering the waterway.

E. Permanent Erosion Control: Permanent erosion control measures shall be implemented to prevent sedimentation of the waterways and to prevent erosion of the Project site.

1.02 Quality Assurance

A. General: Perform all work under this Section in accordance with all pertinent rules and regulations including, but not necessarily limited to, those stated herein and these Specifications.

B. Conflicts: Where provisions of pertinent rules and regulations conflict with these Specifications, the more stringent provisions shall govern.

Part 2 Products

2.01 Sediment Barriers

A. Silt Fence

1. Type A silt fence shall meet the requirements of Tennessee Erosion and Sediment Control Handbook, latest edition. Posts shall be 4 feet in length and can either be made of steel, soft wood or oak. Steel posts shall be 1.3lb./ft. minimum. Soft wood post shall be 3” diameter or 2” x 4”. Oak posts shall be 1.5” x 1.5”. Fasteners for wood posts shall be wire staples or nails. Wire staples are to have a minimum 17 gauge, ¾” crown width, and a ½” leg length. Nails are to have a minimum 14 gauge, ¾” button head, and a 1” length.

2. Type C silt fence is a combination of Type A silt fence fabric with woven wire reinforcement. Type C silt fence woven wire reinforcement shall meet the requirements of Tennessee Erosion and Sediment Control Handbook, latest edition. Posts shall be 4 feet in length and shall be made of steel. Steel posts shall be 1.3lb./ft. minimum.

3. Silt fence fabric shall meet the requirements of the Tennessee Erosion and Sediment Control Handbook, latest edition.

4. Unless otherwise shown on the Drawings or prior approval is given by the Engineer, Type C silt fence supported by steel posts shall be used.

2.02 Storm Drain Inlet Protection

A. Silt Fence Inlet Protection: Type C Silt fence supported by steel posts shall be used. See Silt Fence this Part.

B. Baffle Box Inlet Protection

1. Shall be constructed of 2" x 4" boards spaced a maximum of 1 inch apart or of plywood with weep holes 2 inches in diameter.

2. Gravel: 1/2 to 3/4 inch gravel (#57 washed stone).

3. Type C filter fabric wrapping: See Silt Fence this Part.

C. Block and Gravel Inlet Protection

1. Concrete Masonry Block.

2. Gravel: 1/2 to 3/4 inch gravel (#57 washed stone).

3. Hardware cloth or comparable wire mesh with 1/2 inch openings.

D. Gravel Drop Protection

1. Gravel: 1/2 to 3/4 inch gravel (#57 washed stone).

E. Sod Inlet Protection

1. 1' wide strips of sod. See Section 32 92 23 for correct placement and planting schedules.

2.03 Check Dams

A. Stone Check Dams

1. Stone check dams shall be constructed of graded size 2-10 inch stone.

2. The geotextile shall be in accordance with AASHTO M288-96 Section 7.3, Separation Requirements, Table 3.

B. Rock Check Dams

1. Stone sizing: The stone size shall be determined by the design criteria established in the Rip Rap Section - Tennessee Erosion and Sediment Control Handbook, latest edition. The rock dam can be faced with smaller stone on the upstream side for additional filtering effect.

2. Geotextile: Geotextiles shall be used as a separator between the graded stone, the soil base, and the abutments. The geotextile shall be specified in accordance with AASHTO M288-96 Section 7.5, Permanent Erosion Control Recommendations.

2.04 Construction Exit

A. Stone: Use sound, tough, durable stone resistant to the action of air and water. Slabby or shaley pieces will not be acceptable. Aggregate size shall be TDOT #1 or #2 stone (1.5 to 3.5-inch stone).

B. Geotextile: The geotextile underliner must be placed the full length and width of the entrance. Geotextile selection shall be based on AASHTO M288-98 specification:

1. For subgrades with a CBR greater than or equal to 3 or shear strength greater than 90 kPa, geotextile must meet requirements of section AASHTO M288-96 Section 7.3, Separation Requirements.

2. For subgrades with a CBR between 1 and 3 or sheer strength between 30 and 90 kPa, geotextile must meet requirements of section AASHTO M288-96

Section 7.4, Stabilization Requirements.

2.05 Rip Rap

A. Use only one method throughout the job.

B. Stone Rip Rap: Use sound, tough, durable stones resistant to the action of air and water. Slabby or shaley pieces will not be acceptable. Sizes are shown in the Drawings for each design requiring rip rap construction. The following classifications shall be used in the construction of slope or channels as shown on the Drawings:

1. Graded Rip Rap - durable, dense, specifically selected and graded, quarried stone, placed to prevent erosion. Sizes shall be in accordance to the Tennessee Erosion and Sediment Control Handbook, latest edition.

2. Filter Bedding Stone - stone generally less than 6 inches in size, that may be placed under graded rip rap stone in a layer or combination of layers, designed and installed in such a manner as to prevent loss of underlying soil or finer materials because of moving water. Sizes shall be in accordance to the Tennessee Erosion and Sediment Control Handbook, latest edition.

3. Surge Stone - a quarry run ungraded, unscreened material which may or may not have fines.

2.06 Gabions

A. Gabions shall be large, multi-celled, rectangular wire mesh boxes filled with 4 to 8-inch size pieces of stone to prevent erosion, scour or sloughing of an embankment. Gabions shall have the following features:

1. Hexagonal mesh pattern, which under stress will deform but not break.

2. Triple twist, which will make the mesh non-raveling.

3. Reinforcing wires woven into each corner, which will increase the strength at the stress points and help the gabion retain its shape during and after filling.

4. A diaphragm securely attached to the base, which will prevent the shifting of the stone and at the same time, reinforce the gabion.

B. The wire mesh shall have an opening of approximately 3 x 4-inches and shall be a minimum 12 gauge. Wire mesh shall be galvanized.

C. Gabion baskets shall be constructed in the dimensions shown in the Drawings.

D. Geotextile: Geotextiles shall be used behind all gabion structures. Geotextiles shall be in accordance with AASHTO M288-96 Section 7.5, Permanent Erosion Control Requirements.

2.07 Erosion Control Matting and Blankets

A. All blanket and matting materials shall be in accordance to the Tennessee Erosion and Sediment Control Handbook, latest edition.

B. Temporary Erosion Control Blankets: Use in concentrated flow areas, all slopes steeper than 3:1 and with a height of ten feet or greater, and cuts and fills within stream buffers, shall be stabilized with the appropriate erosion control matting or blankets.

1. Straw blankets: Shall consist of weed-free straw from agricultural crops formed into a blanket. Blankets shall have a top side of photodegradable plastic mesh with a maximum mesh size of 5/16 x 5/16 inch sewn to the straw with biodegradable thread that is appropriate for slopes. The blanket shall have a minimum thickness of 3/8 inch and minimum dry weight of 0.5 pounds per square yard.

2. Excelsior blankets: Shall consist of curled wood excelsior (80% of fibers are six inches or longer) formed into a blanket. The blanket shall have clear markings indicating the top side of the blanket and be smolder resistant. Blankets shall have photodegradable plastic mesh having a maximum mesh size of 1-½ x 3 inches. The blanket shall have a minimum thickness of 1/4 of an inch and a minimum dry weight of 0.8 pounds per square yard. Slopes require excelsior matting with the top side of the blanket covered in the plastic mesh, and for waterways, both sides of the blanket require plastic mesh.

3. Coconut fiber blankets: Shall consist of 100% coconut fiber formed into a blanket. The minimum thickness of the blanket shall be 1/4 of an inch with a minimum dry weight of 0.5 pounds per square yard. Blankets shall have photodegradable plastic mesh, with a maximum mesh size of 5/8 x 5/8 inch and sewn to the fiber with a breakdown resistant synthetic yarn. Plastic mesh is required on both sides of the blanket if used in waterways. A maximum of two inches is allowable for the stitch pattern and row spacing.

4. Wood fiber blankets: Shall consist of reprocessed wood fibers that does not possess or contain any growth or germination inhibiting factors. The blanket shall have a photodegradable plastic mesh, with a maximum mesh size of 5/8 x 3/4 inch, securely bonded to the top of the mat. The blanket shall have a minimum dry weight of 0.35 pounds per square yard. A maximum of two inches is allowable for the stitch pattern and row spacing. This practice shall be applied only to slopes.

5. Jute Mesh: To be applied to slopes. Jute mesh with a 48 inch width shall show between 76 and 80 warpings and a one yard length shall show between 39 to 43 weftings. The woven mesh shall be at least 45 inches wide. Yarn shall have a unit weight of at least 0.9 pounds per square yard, but not more than 1.5 pounds per square yard.

C. Permanent Matting: Use in concentrated flow areas, all slopes steeper than 3:1 and

with a height of ten feet or greater, and cuts and fills within stream buffers, shall be stabilized with the appropriate erosion control matting or blankets.

1. Permanent matting shall consist of a lofty web of mechanically or melt bonded polymer nettings, monofilaments or fibers which are entangled to form a strong and dimensionally stable matrix. Polymer welding, thermal or polymer fusion, or the placement of fibers between two high strength, bi-axially oriented nets bound securely together by parallel lock stitching with polyolefin, nylon or polyester threads are all appropriate bonding methods. Mats shall maintain their shape before, during, and after installation, under dry or water saturated conditions. Mats must be stabilized against ultraviolet degradation and shall be inert to chemicals normally encountered in a natural soil environment.

2. The mat shall conform to the following physical properties:

Property	**Minimum Value**
Thickness	0.5 inch
Weight	0.6 PSY
Roll Width	38 inches
Tensile Strength	
Length (50% elongation)	15 lbs./in.
Length (ultimate)	20 lbs./in.
Width (50% elongation)	5 lbs./in.
Width (ultimate)	10 lbs./in.
(ASTM D 1682-6" strip)	
Ultraviolet Stability	80%

(1,000 hrs. in an Atlas ARC Weatherometer, ASTM G 23, Type D in accordance with ASTM D 822)

D. Stapling and Anchoring Materials

1. Temporary Blankets: Staples shall be used to anchor temporary blankets. U-shaped wire (11 gauge or greater) staples with legs at least 6 inches in length and a crown of one inch or appropriate biodegradable staples can be used. Staples shall be of sufficient thickness for soil penetration without undue distortion.

2. Permanent Matting: Sound wood stakes, 1 x 3 inches stock sawn in a triangular shape, shall be used. Depending on the compaction of the soil, select stakes with a length from 12 to 18 inches. U-shaped staples shall be 11 gauge steel or greater, with legs at a minimum of 8 inches length with a 2 inch crown.

2.08 Channel Stabilization

A. Vegetated Lining: Vegetated lining shall be designed to resist erosion when the channel is flowing at the 25-year frequency discharge. Temporary erosion control blankets or sod shall be used on all channels and concentrated flow areas to aid in the establishment of the vegetated lining. If a vegetated lining is desired in a channel with velocities between 5-10 ft./sec., permanent soil reinforcement matting shall be used. Refer to Erosion Control Matting and Blankets this Part.

B. Rock Rip Rap Lining: Rock rip rap shall be designed to resist displacement when the channel is flowing at the 25-year frequency discharge. Rock rip rap lining should be used when channel velocities are between 5 and 10 ft./sec. Refer to Rip Rap this Part.

2.09 Downdrain Structures

A. Temporary Downdrain

1. Pipe: Design the slope drain using heavy-duty, flexible materials such as non-perforated, corrugated plastic pipe or specially designed flexible tubing. Use reinforced, hold-down grommets or stakes to anchor the pipe at intervals not to exceed 10 feet with the outlet end securely fastened in place. The pipe must extend beyond the toe of the slope.

2. Filter Ring: A stone filter ring shall be placed at the inlet for added sediment filtering capacity. Refer to “Filter Ring” this Part.

3. Storm Drain Outlet Protection: Rock rip rap shall be placed at the outlet for energy dissipation. A Tee outlet, flared end section, or other suitable device may be used in conjunction with the rip rap for additional protection. Refer to “Storm Drain Outlet Protection” this Part.

B. Permanent Downdrain

1. Pipe: Design the slope drain using heavy-duty, flexible materials such as non-perforated, corrugated plastic or steel pipe or specially designed flexible tubing. Use reinforced, hold-down grommets or stakes to anchor the pipe at intervals not to exceed 10 feet with the outlet end securely fastened in place. The pipe must extend beyond the toe of the slope.

2. Paved Flume: The paved flume may have a parabolic, rectangular or trapezoidal cross-section and shall consist of reinforced concrete or asphalt paving.

3. Filter Ring: A stone filter ring shall be placed at the inlet for added sediment filtering capacity. Refer to “Filter Ring” this Part.

4. Storm Drain Outlet Protection: Rock rip rap shall be placed at the outlet for energy dissipation. A Tee outlet, flared end section, or other suitable device may be used in conjunction with the rip rap for additional protection. Refer to “Storm Drain Outlet Protection” this Part.

2.10 Filter Ring

A. Stone sizing

1. When utilized at inlets with diameters less than 12 inches, the filter ring shall be constructed of TDOT Class A-3 stone no smaller than 2-6 inches (15 - 30 lbs.)

2. When utilized at pipes with diameters greater than 12 inches, the filter ring shall be constructed of TDOT Class A-1 stone no smaller than 2-15 inches (50 - 100 lbs.)

3. For added sediment filtering capabilities the upstream side of the rip rap can be faced with TDOT #57 stone, minimum stone size of ¾ inch.

2.11 Temporary Sediment Basin

Temporary Sediment Basins shall be constructed in accordance with the plan and details shown in the Drawings.

2.12 Storm Drain Outlet Protection

A. Stone size: Stone size as indicated for each outlet in the Storm Drain Outlet Protection detail shown in the Drawings.

B. Geotextile: Geotextiles shall be used as a separator between the graded stone, the soil base, and the abutments. The geotextile shall be specified in accordance with AASHTO M288-96 Section 7.5, Permanent Erosion Control Recommendations.

C. Stone quality: Select stone for rip rap from field stone or quarry stone. The stone should be hard, angular, and highly weather-resistant. The specific gravity of the individual stones should be at least 2.5.

2.13 Temporary Mulching

A. Dry straw or hay: Shall be applied at a depth of 2 to 4 inches providing complete soil coverage. Material shall be clean, seed-free cereal hay or straw.

B. Wood waste (chips, sawdust or bark): Shall be applied at a depth of 2 to 3 inches. Organic material from the clearing stage of development should remain on site, be chipped, and applied as mulch.

C. Mulch Binder: Mulch on slopes exceeding 3 (horizontal) to 1 (vertical) shall be held in place by the use of a mulch binder, as approved by the Engineer. The mulch binder shall be non toxic to plant and animal life and shall be approved by the Engineer.

2.14 Temporary Grassing

A. Grassing materials shall meet the requirements of the Tennessee Erosion and Sediment Control Handbook, latest edition, section that includes “Disturbed Area Stabilization (With Temporary Vegetation)”.

B. Seed rate, fertilization, lime application and other requirements shall be provided as shown on the Drawings.

C. Water: Water shall be free of excess and harmful chemicals, organisms and substances which may be harmful to plant growth or obnoxious to traffic. Salt or brackish water shall not be used.

2.15 Silt Curtain

A. Barriers shall be a bright color (yellow or "international" orange are recommended) that will attract the attention of nearby boaters.

B. The curtain fabric shall meet the following minimum requirements:

PHYSICAL PROPERTIES OF TURBIDITY CURTAIN FABRIC

PHYSICAL PROPERTY	REQUIREMENT
THICKNESS, MILS	45
WEIGHT/OZ.SQ.YD:	
TYPE I	18
TYPE II	18 OR 22
TYPE III	22
GRAB TENSILE STRENGTH, LBS.	300
UV INHIBITOR	MUST BE INCLUDED

C. Seams in the fabric shall be vulcanized, welded, or sewn, and shall develop the full strength of the fabric.

D. Flotation devices shall be flexible, buoyant units, contained in an individual flotation sleeve or collar attached to the curtain. Buoyancy provided by the flotation units shall be sufficient to support the weight of the curtain and maintain a freeboard of at least 3 inches above the water surface.

E. Load lines shall be fabricated into the bottom of all floating turbidity curtains. When installing in moving waters, load lines shall also fabricated into the top of the fabric. The top load line shall consist of woven webbing or vinyl-sheathed steel cable, and shall have a break strength in excess of 10,000 pounds. The supplemental (bottom) load line shall consist of a chain incorporated into the bottom hem of the curtain, with sufficient weight to serve as ballast to hold the curtain in a vertical position. Additional anchorage shall be provided as necessary. The load lines shall have suitable connecting devices which develop the full breaking strength for connecting to load lines in adjacent sections for calm water installation.

F. External anchors may consist of wooden or metal stakes (2- x 4-inch or 2.5-inch minimum diameter wood, or 1.33 pounds/linear foot steel) when installing in calm waters; when installing in moving waters, bottom anchors must be used.

G. Bottom anchors shall be sufficient to hold the curtain in the same position relative to the bottom of the watercourse, without interfering with the action of the curtain. The anchor may dig into the bottom (grappling hook, plow or fluke-type), or may be weighted (mushroom type), and shall be attached to a floating anchor buoy via an anchor line. The anchor line shall run from the buoy to the top load line of the curtain. When installing in moving waters, these lines shall contain enough slack to allow the buoy and curtain to float freely with tidal changes without pulling the buoy or curtain down, and shall be checked regularly to make sure they do not become entangled with debris. As previously noted, anchor spacing will vary with current velocity and potential wind and wave action; manufacturer's recommendations should be followed.

2.16 Sediment Traps

A. The area under the embankment should be cleared, grubbed, and stripped of any vegetation and root mat.

B. Fill material for the embankment should be free of roots or other woody vegetation, organic material, large stones, and other objectionable material.

Part 3 Execution

3.01 General

A. Temporary and permanent erosion and sedimentation control measures shall prevent erosion and prevent sediment from exiting the site. If, in the opinion of the Engineer, the Contractor's temporary erosion and sedimentation control measures are inadequate, the Contractor shall provide additional maintenance for existing measures or additional devices to control erosion and sedimentation on the site.

B. All erosion and sedimentation control devices and structures shall be inspected by the Contractor at least once a week and within 24 hours of the end of a storm that is 0.5 inches or greater. Any device or structure found to be damaged will be repaired or replaced by the end of the day. Sediment ponds shall be cleaned out prior to the silt reaching the height or elevation shown on the Drawings.

C. All erosion and sedimentation control measures and devices shall be constructed and maintained as indicated on the Drawings or specified herein until adequate permanent disturbed area stabilization has been provided and accepted by the Engineer. Once adequate permanent stabilization has been provided and accepted by the Engineer, all temporary erosion and sedimentation control structures and devices shall be removed.

3.02 Installation and Maintenance of Erosion and Sediment Controls

A. Sediment Barriers

1. Sediment barriers shall include, but are not necessarily limited to silt fences and any device which prevents sediment from exiting the disturbed area.

2. Sediment barriers shall not be used in any flowing stream, creek or river.

3. Sediment barriers shall be installed as shown on the Drawings and as directed by the Engineer.

4. Along stream buffers and other sensitive areas, two rows of Type C silt fence or one row of Type C silt fence backed by hay bales shall be used.

5. Sediment barriers shall be maintained to ensure the depth of impounded sediment is no more than one-half of the original height of the barrier or as directed by the Engineer. Torn, damaged, destroyed or washed-out barriers shall be repaired, reinforced or replaced with new material and installed as shown on the Drawings and as directed by the Engineer.

6. Sediment Barrier Removal

a. Sediment barrier shall be removed once the disturbed area has been stabilized with a permanent vegetative cover and the sediment barrier is no longer required as directed by the Engineer.

b. Accumulated sediment shall be removed from the barrier and spread over the site.

c. All non-biodegradable parts of the barrier shall be disposed of properly.

d. The disturbed area created by barrier removal shall be permanently stabilized.

B. Storm Drain Inlet Protection

1. Inlet Sediment Traps shall include, but are not necessarily limited to, Silt Fence Inlet Protection, Baffle Box, Block and Gravel Inlet Protection, Gravel Inlet Protection, Sod Inlet Protection and any device which traps sediment and prevents it from exiting the disturbed area.

2. Inlet Sediment Traps shall be installed as shown on the Drawings and as directed by the Engineer.

3. For each Inlet Sediment Traps type the following installation guidelines shall be used:

a. Silt Fence Inlet Protection: Type C silt fence supported by steel posts shall be used. The stakes shall be spaced evenly around the perimeter of the inlet a maximum of 3 feet apart, and securely driven into the ground, approximately 18 inches deep. The fabric shall be entrenched 12 inches

and backfilled with crushed stone or compacted soil. Fabric and wire shall be securely fastened to the posts, and fabric ends must be overlapped a minimum of 18 inches or wrapped together around a post to provide a continuous fabric barrier around the inlet.

b. Baffle Box: The baffle box shall be constructed of 2" x 4" boards spaced a maximum of 1 inch apart or of plywood with weep holes 2 inches in diameter. The weep holes shall be placed approximately 6 inches on center vertically and horizontally. Gravel shall be placed outside the box, all around the inlet, to a depth of 2 to 4 inches. The entire box is wrapped in Type C filter fabric that shall be entrenched 12 inches and backfilled.

c. Block and Gravel Inlet Protection: One block is placed on each side of the structure on its side in the bottom row to allow pool drainage. The foundation should be excavated at least 2 inches below the crest of the storm drain. The bottom row of blocks is placed against the edge of the storm drain for lateral support and to avoid washouts when overflow occurs. If needed, lateral support may be given to subsequent rows by placing 2" x 4" wood studs through block openings. Hardware cloth or comparable wire mesh with 1/2 inch openings shall be fitted over all block openings to hold gravel in place. Clean gravel should be placed 2 inches below the top of the block on a 2:1 slope or flatter and smoothed to an even grade.

d. Gravel Inlet Protection: Stone and gravel are used to trap sediment. The slope toward the inlet shall be no steeper than 3:1. A minimum 1 foot wide level stone area shall be left between the structure and around the inlet to prevent gravel from entering the inlet. On the slope toward the inlet, stone 3 inches in diameter and larger should be used. On the slope away from the inlet, 1/2 to 3/4 inch gravel (#57 washed stone) should be used at a minimum thickness of 1 foot.

e. Sod Inlet Protection: The sod shall be placed to form a turf mat covering the soil for a distance of 4 feet from each side of the inlet structure. Sod strips shall be staggered so that adjacent strip ends are not aligned.

5. The trap shall be inspected daily and after each rain and repairs made as needed. Sediment shall be removed when the sediment has accumulated to one-half the height of the trap. Sediment shall be removed from curb inlet protection immediately. For excavated inlet sediment traps, sediment shall be removed when one-half of the sediment storage capacity has been lost to sediment accumulation.

6. Sediment Barrier Removal

a. Sediment barrier shall be removed once the disturbed area has been stabilized with a permanent vegetative cover and the sediment barrier is no longer required as directed by the Engineer.

b. Accumulated sediment shall be removed from the barrier and spread over

the site.

c. All non-biodegradable parts of the barrier shall be disposed of properly.

d. The disturbed area created by barrier removal shall be permanently stabilized.

C. Check and Rock Dams

1. Check and rock dams shall not be used in any flowing stream, creek or river.

2. Check and rock dams shall be installed as shown on the Drawings and as directed by the Engineer.

3. Stone check dams: Mechanical or hand placement shall be required to insure complete coverage of entire width of ditch or swale and that center of dam is lower than edges.

4. Rock dams: Mechanical or hand placement will be required to insure that the rock dam extends completely across the channel and securely ties into both channel banks. The center of the dam must be no less than six inches lower than the lowest side, to serve as a type of weir. Gabions can be installed to serve as rock filter dams, but should follow recommended sizing and installation specifications. Refer to Gabions in this Specification.

5. Height: The center of the check dam must be at least 9 inches lower than outer edges. Dam height should be 2 feet maximum measured to center of check dam.

6. Side Slopes: Side slopes shall be 2:1 or flatter.

7. Spacing: Two or more check dams in series shall be used for drainage areas greater than one acre. Maximum spacing between dams should be such that the toe of the upstream dam is at the same elevation as the top of the downstream dam.

8. A geotextile should be used as a separator between the graded stone and the soil base and abutments. The geotextile shall be placed immediately adjacent to the subgrade without any voids and extend five feet beyond the downstream toe of the dam to prevent scour.

9. Check and rock dams shall be maintained to ensure the depth of impounded sediment is no more than one-half of the original height of the check dam or as directed by the Engineer. Damaged, destroyed or washed-out check dams shall be repaired, reinforced or replaced with new material and installed as shown on the Drawings and as directed by the Engineer.

9. Check and Rock Dams removal

a. Check and rock dams shall be removed once the disturbed area has

been stabilized with a permanent vegetative cover and the sediment barrier is no longer required as directed by the Engineer.

b. Accumulated sediment shall be removed from the check and rock dams when it reaches a depth of one-half of the original height of the dam and spread over the site.

c. All non-biodegradable parts of the barrier shall be disposed of properly.

d. The disturbed area created by check or rock dam removal shall be permanently stabilized.

D. Construction Exit

1. Construction exit(s) shall be placed as shown on the Drawings and as directed by the Engineer. A construction exit shall be located at any point traffic will be leaving a disturbed area to a public right-of-way, street, alley, sidewalk or parking area.

2. Placement of Construction Exit Material: The ground surface upon which the construction exit material is to be placed shall be prepared to a smooth condition free from obstructions, depressions or debris. The geotextile underliner shall be placed to provide a minimum number of overlaps and a minimum width of one foot of overlap at each joint. The stone shall be placed with its top elevation conforming to the surrounding roadway elevations. The stone shall be dropped no more than three feet during construction.

3. Construction Exit Maintenance: The Contractor shall regularly maintain the exit with the top dressing of stone to prevent tracking or flow of soil onto public rights-of-way and paved surfaces as directed by the Engineer. This shall require periodic top dressing with 1.5-3.5 inch stone, as conditions demand.

4. Construction Exit Removal: Construction exit(s) shall be removed and properly disposed of when the disturbed area has been properly stabilized, the tracking or flow of soil onto public rights of way or paved surfaces has ceased and as directed by the Engineer.

E. Rip Rap

1. Rip rap shall be placed as shown on the Drawings and as directed by the Engineer. Rip rap shall be placed at all points where natural vegetation is disturbed on the banks of streams or drainage ditches. Compact backfill and place rip rap to prevent subsequent settlement and erosion. This requirement applies equally to construction alongside a stream or drainage ditch as well as crossing a stream or drainage ditch.

2. When trenching across a stream or drainage ditch, place rip rap over the entire disturbed area upstream and downstream of the trench excavation. Place rip rap across creek bottom, across creek banks and extend rip rap placement five feet beyond the top of each creek bank.

3. Preparation of Foundations: The ground surface upon which the rip rap is to be placed shall be brought to the correct lines and grades before placement is commenced. Where filling of depressions is required, the new material shall be compacted with hand or mechanical tampers. Unless at creek banks or otherwise shown or specified, rip rap shall begin in a toe ditch constructed in original ground around the toe of the fill or the cut slope. The toe ditch shall be two feet deep in original ground, and the side next to the fill or cut shall have that same slope. After the rip rap is placed, the toe ditch shall be backfilled and the excess dirt hauled off of the site and disposed of properly.

4. Placement of Plastic Filter Fabric

   a. Plastic filter fabric shall be placed under all rip rap unless shown or specified otherwise.

   b. Filter fabric shall not be placed under rip rap on stream or drainage ditch crossings.

   c. The surface to receive filter fabric shall be prepared to a smooth condition free from obstructions, depressions and debris. The filter fabric shall be installed with the long dimension running up the slope and shall be placed to provide a minimum number of overlaps. The fabric shall be placed to provide a minimum width of one foot of overlap at each joint. The fabric shall be placed so that the upstream strip overlaps the downstream strip. The fabric shall be anchored in place with securing pins of the type recommended by the fabric manufacturer. Pins shall be placed on or within 3-inches of the centerline of the overlap. The fabric shall be placed loosely to avoid stretching and tearing during placement of the stone. The fabric shall be protected at all times during construction from clogging due to clay, silts, chemicals or other contaminants. Contaminated fabric or fabric damaged during installation or during placement of rip rap shall be removed and replaced with uncontaminated and undamaged fabric at no additional cost to the Owner.

5. Placement of Rip Rap: Rip rap shall be placed on a 6-inch layer of soil, crushed stone or sand overlaying the filter fabric. Rip rap shall be placed with its top elevation conforming with the finished grade or the natural existing slope of the stream bank and stream bottom. The stone shall be dropped no more than three feet during construction.

   a. Stone Rip Rap: Stone rip rap shall be placed to provide a uniform surface to the thickness shown on the Drawings. The thickness tolerance for the course shall be -3-inches and +6-inches.

F. Gabions

1. Where, in the opinion of the Engineer, the slope of the banks of the stream is too steep to support rip rap, gabions shall be provided, in lieu of rip rap.

2. Gabions shall be assembled according to the manufacturer's recommendations. Laterally adjoining gabions shall be wired together by vertical edges. Vertically adjoining gabions shall be wired together along the front and back edges. Rip rap size for gabion construction shall be large enough not to fall out of gabions, but small enough to form three layers. Gabions shall be placed over a 6-inch layer of soil, crushed stone or sand overlaying a filter fabric.

G. Erosion Control Matting and Blankets

1. Erosion Control Matting and Blankets be placed as shown on the Drawings and as directed by the Engineer.

2. After the site has been shaped and graded to the approved design, prepare a friable seedbed relatively free from clods and rocks more than one inch in diameter, and any foreign material that will prevent contact of the soil stabilization mat with the soil surface. Surface must be smooth to ensure proper contact of blankets or matting to the soil surface. If necessary, redirect any runoff from the ditch or slope during installation.

3. Follow manufacturer’s recommendations and follow details as shown on the Drawings for laying and stapling.

4. All erosion control blankets and matting should be inspected periodically following installation, particularly after rainstorms to check for erosion and undermining. Any dislocation or failure should be repaired immediately. If washouts or breakage occurs, reinstall the material after repairing damage to the slope or ditch. Continue to monitor these areas until they become permanently stabilized.

H. Channel Stabilization

1. Where needed, all trees, brush, stumps and other objectionable materials shall be removed so they will not interfere with the construction or proper functioning of the channel.

2. Where possible, trees will be left standing, and stumps will not be removed.

3. Excavation shall be at the locations and grades shown on the Drawings. The lining shall not compromise the capacity of the channel, e.g. the emergency spillway shall be over-excavated so that the lining will be flush with the slope surface.

4. The geotextile shall be placed on a smooth graded surface. The geotextile shall be placed in such a manner that it will not excessively stretch or tear upon placement of the overlying materials. Care should be taken to place the geotextile in intimate contact with the soil such that no void spaces exist between the underlying soil and the geotextile.

5. Construction plans will specifically detail the location and handling of spoils. Spoil material resulting from clearing, grubbing and channel excavation shall be

disposed of in a manner which will:

a. not cause an increase in flood stage,

b. minimize overbank wash,

c. not cause an adverse effect on the environmental integrity of the area,

d. provide for the free flow of water between the channel and flood plain unless the valley routing and water surface profile are based on continuous dikes being installed,

e. leave the right-of-way in the best condition feasible, and

f. improve the aesthetic appearance of the site to the extent feasible.

6. Channel linings shall be established or installed immediately after construction or as soon as weather conditions permit.

7. Structures shall be installed according to lines and grades shown on the plan. The foundation for structures shall be cleared of all undesirable materials prior to the installation of the structures.

8. Materials used in construction shall be of permanency commensurate with the design frequency and life expectancy of the facility.

9. Earthfill, when used as a part of the structures, shall be placed according to the installation requirements for sediment basin embankments.

10. Construction operations shall be carried out in such a manner that erosion and air and water pollution will be minimized. State and local laws concerning pollution abatement shall be complied with.

11. Vegetation shall be established on all disturbed areas immediately after construction. If weather conditions cause a delay in establishing vegetation, the area shall be mulched in accordance with the standard for mulching.

12. All temporary access roads or travelways shall be appropriately closed to exclude traffic.

13. Trees and other fallen natural vegetation not causing a deterrent to stream flow should be left for the purpose of habitat.

I. Downdrain Structures

1. Place slope drains on undisturbed soil or well compacted fill at locations and elevations shown on the Drawings.

2. Slightly slope the section of pipe under the dike toward its outlet.

3. Hand tamp the soil under and around the entrance section in lifts not to exceed 6 inches.

4. Ensure that fill over the drain at the top of the slope has minimum dimensions of 1.5 ft. depth, 4 ft. top width, and 3:1 side slopes.

5. Ensure that all slope drain connections are watertight.

6. Ensure that all fill material is well-compacted. Securely fasten the exposed section of the drain with grommets or stakes spaced no more than 10 feet apart.

7. Place the drain slightly diagonally across the slope, extending the drain beyond the toe of the slope. Curve the outlet uphill and adequately protect the outlet from erosion.

8. If the drain is conveying sediment-laden runoff, direct all flows into a sediment trap or sediment basin.

9. Make the settled, compacted dike ridge no less than one foot above the top of the pipe at every point.

10. Immediately stabilize all disturbed areas following construction.

11. Install Storm Drain Outlet Protection as specified in this Part.

12. Maintenance: Inspect the slope drain and supporting diversion after every rainfall and promptly make necessary repairs. When the protected area has been permanently stabilized and the permanent stormwater disposal system is fully functional, temporary measures may be removed, materials disposed of properly, and all disturbed areas stabilized appropriately.

J. Filter Ring

1. Filter rings be placed as shown on the Drawings and as directed by the Engineer.

2. The filter ring shall be constructed at a height no less than two feet from grade.

3. Mechanical or hand placement of stone shall be required to uniformly surround the structure to be supplemented. Refer to Rip Rap, within this Specification, for rock rip rap specifications.

4. When utilized below a storm drain outlet, it shall be placed such that it does not create a condition causing water to back-up into the storm drain and inhibit the function of the storm drain system.

5. Maintenance: The filter ring must be kept clear of trash and debris. This will require continuous monitoring and maintenance, which includes sediment removal when one-half full. Structures are temporary and should be removed

when the land-disturbing project has been stabilized.

K. Temporary Sediment Basin

1. Site Preparation: Areas under the embankment and under structural works shall be cleared, grubbed, and stripped of topsoil. All trees, vegetation, roots and other objectionable material shall be removed and disposed of by approved methods. In order to facilitate clean-out or restoration, the pool area (measured at the top of the pipe spillway) will be cleared of all brush and trees.

2. Cut-off Trench: A cut-off trench will be excavated along the centerline of earth fill embankments. The minimum depth shall be 2 feet. The cut-off trench shall extend up both abutments to the riser crest elevation. The minimum bottom width shall be 4 feet, but wide enough to permit operation of compaction equipment. The side slopes shall be no steeper than 1:1. Compaction requirements shall be the same as those for the embankment. The trench shall be drained during the backfilling and compaction operations.

3. Embankment: The fill material shall be taken from approved areas shown on the Drawings. It shall be clean mineral soil free of roots, woody vegetation, oversized stones, rocks or other objectionable material. Relatively pervious materials such as sand or gravel (Unified Soil Classes GW, GP, SW & SP) shall be placed in the downstream section of the embankment. Areas on which fills are to be placed shall be scarified prior to placement of fill. The fill material shall contain sufficient moisture so that it can be formed by hand into a ball without crumbling. If water can be squeezed out of the ball, it is too wet for proper compaction. Fill material shall be placed in six-inch to eight-inch thick continuous layers over the entire length of the fill. Compaction shall be obtained by routing and hauling the construction equipment over the fill so that the entire surface of the fill is traversed by at least one wheel or tread track of the equipment or by the use of a compactor. The embankment shall be constructed to an elevation 5 percent higher than the design height to allow for settlement.

4. Principal Spillway: The riser shall be securely attached to the pipe or pipe stub by welding the full circumference making a watertight structural connection. The pipe stub must be attached to the riser at the same percent (angle) of grade as the outlet conduit. The connection between the riser and the riser base shall be watertight. All connections between pipe sections must be achieved by approved watertight band assemblies. The pipe and riser shall be placed on a firm, smooth foundation of impervious soil as the embankment is constructed. Breaching the embankment is unacceptable. Pervious materials such as sand, gravel, or crushed stone shall not be used as backfill around the pipe or anti-seep collar. The fill material around the pipe spillway shall be placed in four inch layers and compacted under and around the pipe to at least the same density as the adjacent embankment. Care must be taken not to raise the pipe from firm contact with its foundation when compacting under the pipe haunches. A minimum depth of two feet of hand compacted backfill shall be placed over the pipe spillway before crossing it with construction equipment.

5. Emergency Spillway: The emergency spillway shall be installed in undisturbed ground. The achievement of planned elevations, grades, design width, entrance and exit channel slopes are critical to the successful operation of the emergency spillway and must be constructed within a tolerance of ± 0.2 feet. If the emergency spillway requires erosion protection other than vegetation, the lining shall not compromise the capacity of the emergency spillway, e.g. the emergency spillway shall be over-excavated so that the lining will be flush with the slope surface.

6. Vegetative Treatment: Stabilize the embankment and all other disturbed areas in accordance with the appropriate permanent vegetative measure, as directed by the Engineer, immediately following construction. In no case shall the embankment remain unstabilized for more than seven days.

7. Erosion and Pollution Control: Construction operations will be carried out in such a manner that erosion and water pollution will be minimized. State and local law concerning pollution abatement shall be complied with.

8. Maintenance: Repair all damages caused by soil erosion or construction equipment at or before the end of each working day. Sediment shall be removed from the basin when it reaches the specified distance below the top of the riser. Sediment shall not enter adjacent streams or drainage ways during sediment removal or disposal. The sediment shall not be deposited downstream from the embankment, adjacent to a stream or floodplain.

9. Final Disposal: When temporary structures have served their intended purpose and the contributing drainage area has been properly stabilized, the embankment and resulting sediment deposits are to be leveled or otherwise disposed of in accordance with approved sediment control plan. The proposed use of a sediment basin site will often dictate final disposition of the basin and any sediment contained therein. If the site is scheduled for future construction, then the embankment and trapped sediment must be removed, safely disposed of, and backfilled with a structural fill. When the basin area is to remain open space, the pond may be pumped dry, graded and backfilled.

L. Storm Drain Outlet Protection

1. Ensure that the subgrade for the filter and rip rap follows the required lines and grades shown in the plan. Compact any fill required in the subgrade to the density of the surrounding undisturbed material. Low areas in the subgrade on undisturbed soil may also be filled by increasing the rip rap thickness.

2. The rip rap and gravel filter must conform to the specified grading limits shown in the plans.

3. Geotextile must meet design requirements and be properly protected from punching or tearing during installation. Repair any damage by removing the rip rap and placing another piece of filter fabric over the damaged area. All connecting joints should overlap a minimum of 1 foot. If the damage is extensive, replace the entire filter fabric.

4. Rip rap may be placed by equipment, but take care to avoid damaging the filter.

5. The minimum thickness of the rip rap should be 1.5 times the maximum stone diameter.

6. Construct the apron on zero grade with no overfall at the end. Make the top of the rip rap at the downstream end level with the receiving area or slightly below it.

7. Ensure that the apron is properly aligned with the receiving stream and preferably straight throughout its length. If a curve is needed to fit site conditions, place it in the upper section of the apron.

8. Immediately after construction, stabilize all disturbed areas with vegetation.

9. Filter: Install a filter to prevent soil movement through the openings in the rip rap. The filter should consist of a graded gravel layer or a synthetic filter cloth.

10. Maintenance: Inspect rip rap outlet structures after heavy rains to see if any erosion around or below the rip rap has taken place or if stones have been dislodged. Immediately make all needed repairs to prevent further damage.

M. Temporary Mulching

1. When mulch is used without seeding, mulch shall be applied to provide full coverage of the exposed area. Mulch shall be applied as follows:

   a. Dry straw or hay mulch and wood chips shall be applied uniformly by hand or by mechanical equipment.

   b. If the area will eventually be covered with perennial vegetation, 20-30 pounds of nitrogen per acre in addition to the normal amount shall be applied to offset the uptake of nitrogen caused by the decomposition of the organic mulches.

   c. Apply mulch binder on exposed areas, where indicated on the Drawings or as instructed by the Engineer.

2. Anchoring Mulch:

   a. Straw or hay mulch can be pressed into the soil with a disk harrow with the disk set straight or with a special “packer disk.” Disks may be smooth or serrated and should be 20 inches or more in diameter and 8 to 12 inches apart. The edges of the disk should be dull enough not to cut the mulch but to press it into the soil leaving much of it in an erect position.

   b. Straw or hay mulch shall be anchored immediately after application.

   c. Straw or hay mulch spread with special blower-type equipment may be

anchored with emulsified asphalt (Grade AE-5 or SS-1). The asphalt emulsion shall be sprayed onto the mulch as it is ejected from the machine. Use 100 gallons of emulsified asphalt and 100 gallons of water per ton of mulch.

d. For straw or hay mulch, plastic mesh or netting with mesh no larger than one inch by one inch shall be installed according to manufacturer's specifications.

e. Netting of the appropriate size shall be used to anchor wood waste. Openings of the netting shall not be larger than the average size of the wood waste chips.

N. Temporary Grassing

1. Seed Bed Preparation:

a. When a hydraulic seeder is used, seedbed preparation is not required.

b. When using conventional or hand seeding, seedbed preparation is not required if the soil material is loose and not sealed by rainfall.

c. When soil has been sealed by rainfall or consists of smooth cut slopes, the soil shall be pitted, trenched or otherwise scarified to provide a place for seed to lodge and germinate.

2. Select a grass or grass-legume mixture suitable to the area and season of the year.

3. Seed shall be applied uniformly by hand, cyclone seeder, drill, culti-packer-seeder, or hydraulic seeder (slurry including seed and fertilizer). Drill or cultipacker seeders should normally place seed one-quarter to one-half inch deep. Appropriate depth of planting is ten times the seed diameter.

4. Soil should be "raked" lightly to cover seed with soil if seeded by hand.

5. Irrigation: During times of drought, water shall be applied at a rate not causing runoff and erosion. The soil shall be thoroughly wetted to a depth that will insure germination of the seed. Subsequent applications should be made when needed.

6. Temporary Stabilization: Temporary stabilization shall be provided as shown on the Drawings and conforming to these Specifications to control erosion on the site. Temporary stabilization shall be provided to any area which will not receive permanent stabilization within the next 14 calendar days.

O. Silt Curtains

1. Installation:

a. In calm waters, such as lakes and ponds, set the curtain end stakes or anchor points (using anchor buoys if bottom anchors are employed), then tow out the curtain in the furled condition and attach it to these stakes or anchor points. Following this, any additional stakes or buoyed anchors required to maintain the desired location of the curtain shall be set, and these anchor points made fast to the curtain. Only then shall the furling lines be loosened to let the curtain skirt drop.

b. In rivers or in other moving water, set all the curtain anchor points. Care must be taken, prior to putting the furled curtain into the water, to ensure that anchor points are of sufficient holding power to retain the curtain under the existing current conditions. Anchor buoys shall be employed on all anchors to prevent the current from submerging the flotation at the anchor points. If the moving water into which the curtain is being installed is tidal and will subject the curtain to currents in both directions as the tide changes, provide anchors on both sides of the curtain. Once the anchors are secure, the furled curtain shall be secured first to the anchor point that is farthest upstream, then attached sequentially to each downstream anchor point in turn until the entire curtain is in position. At this point, and before unfurling, the "lay" of the curtain shall be assessed and any necessary adjustments made to the anchors. Finally, when the location is ascertained to be as desired, the furling lines shall be loosened to allow the skirt to drop.

c. Attach anchor lines to the flotation device, not to the bottom of the curtain.

2. Removal:

a. Protect the silt curtain skirt from damage by furling the curtain before it is removed from the water.

b. The site selected to bring the curtain ashore should be free of sharp rocks, broken cement, debris, etc., so as to minimize damage when hauling the curtain over the area.

c. If the curtain has a deep skirt and no furling system, it shall be protected by running a small boat with a crew installing furling lines along its length before attempting to remove the curtain from the water.

3. Maintenance:

a. The Contractor is responsible for maintenance of the filter curtain for the duration of the Project in order to ensure the continuous protection of the watercourse.

b. Should repairs to the geotextile fabric become necessary, there are repair kits available from the manufacturer, and their instructions shall be followed to ensure the adequacy of the repair.

c. When the curtain is no longer required, as determined by the Engineer,

the curtain and related components shall be removed in such a manner as to minimize turbidity. Remaining sediment shall be sufficiently settled before removing the curtain. Sediment shall be removed and the original depth (or plan elevation) restored. Any spoils shall be taken to an upland area and be stabilized.

P. Sediment Traps

1. Installation:

a. The embankment should be compacted in 6-inch layers by traversing with construction equipment.

b. All cut and fill slopes should be 2:1 or less (except for excavated, wet storage area which may be at a maximum 1:1. grade).

c. Construction operations should be carried out in such a manner that erosion during construction of the structure is minimized.

d. The earthen embankment should be seeded with temporary or permanent seeding immediately after installation.

2. Removal: The structure should be removed and the area stabilized when the upslope drainage area has been stabilized.

3. Maintenance:

a. Sediment should be removed and the trap restored to its original dimensions when the sediment has accumulated to one half the design volume of the wet storage. Sediment removal from the basin should be deposited in a suitable area and in such a manner that it will not erode and cause sedimentation problems.

b. Maintenance needs identified in inspections or by other means should be accomplished before the next storm event if possible, but in no case more than seven days after the need is identified.

3.03 Clean-Up

A. Dispose of all excess erosion and sedimentation control materials in a manner satisfactory to the Engineer.

B. All temporary erosion control measures shall be removed after final stabilization of the site has occurred, unless otherwise noted on the Drawings or instructed by the Engineer.

END OF SECTION

Part 1 General

1.01 Scope

A. The work covered under this Section includes furnishing all labor, equipment and material required to remove, handle, store and dispose of all materials from existing structures and piping as shown on the Drawings, directed by the Engineer or required for the completion of the work, including all necessary excavation and backfilling.

B. The Contractor shall remove from existing structures and store as directed or dispose of in an approved manner, all valves and piping, mechanical equipment, plumbing, heating, electrical and ventilating fixtures, pipes, ducts, wires and equipment, doors and windows, floor grating and cover plates, steel stairs, pipe railing and the like which are not to remain in service in the finished work, whether or not shown on the Drawings and/or specified herein.

C. The work specified herein and shown on the Drawings is intended to give a general idea of the scope of this work but must not be construed as covering it entirely. The Contractor shall visit the site and judge the amount of work required and the problems Contractor might encounter in the performance of the work.

1.02 Equipment And Piping To Be Removed

The existing equipment and piping to be removed must be coordinated with the Owner to determine what is to be provided to the owner and what is to be disposed.

Part 2 Products

2.01 Materials

All concrete, mortar, grout, steel reinforcement and backfill used in patching, plugging or repairing shall comply in all respects with the applicable material requirements of these Specifications.

Part 3 Execution

3.01 Removal

A. The Contractor shall exercise full care and shall use such methods and equipment during removal as will maintain the usefulness of the various materials and equipment removed. The sequence and order of removal and the method of storing and disposal of removed equipment and piping shall be at all times subject to the direction and approval of the Engineer.

B. Any damage done to structures or equipment during removal and any patching, plugging of holes or repairs necessitated because of removal of equipment and piping shall be repaired as directed by, and to the satisfaction of, the Engineer and the cost

thereof shall be included in the Contract Price.

C. Equipment specified to be removed shall be removed completely, including all related accessories and concrete bases. Any embedded items such as anchor bolts, steel reinforcement, conduit and piping shall be cut off 1-inch below adjacent finished surfaces. The surface shall then be repaired to match adjacent surfaces in finish and appearance.

D. Prior to removing any electrical equipment, all power to the equipment shall be shut off and properly locked out. All power and control wiring for the equipment shall then be disconnected at the starter or circuit breaker, as applicable, and removed from the conduit. Unused conduits shall be plugged.

E. Blemishes or unsightly areas on walls and floors left after removal of equipment shall be cleaned and refinished as necessary to match adjacent surfaces.

F. All holes and openings left after removal of equipment shall be filled or plugged to provide a neat and workmanlike appearance.

G. Where piping designated for removal passes through concrete walls, the openings shall be suitably plugged or capped. Wall pipes and wall sleeves shall be sealed with blind flanges or mechanical joint plugs. Steel pipe sleeves shall be filled with nonshrink grout.

H. Where equipment or piping designated for removal serves to support other equipment or piping designated to remain in service, the Contractor shall provide permanent supports in place of the removed equipment and piping. Where it is necessary to temporarily remove other equipment, piping or electrical work in order to gain access to an item of equipment or piping designated for removal, the Contractor shall restore all such equipment, piping or electrical work to its original condition.

I. Abandoned Piping: Existing vitrified clay, concrete, PVC, cast iron and steel piping to be abandoned shall be cut and plugged or capped at each end. Where existing piping interferes with new piping or construction, it shall be removed beyond the limits required for the proper completion of the work and the open ends plugged or capped Unless otherwise shown, lines shall be plugged or capped at least 1-inch behind or below finished building surfaces and at least 12-inches below outside grade surfaces.

J. Piping and Valving Reinstallation: The Contractor shall include in the Contract Price the cost of removing, refitting, and reinstalling certain pipe, fittings and valves as shown on the Drawings or as deemed by the Engineer to be satisfactory for reuse.

K. Removal of Existing Concrete and Masonry: Existing concrete and masonry shall be removed and disposed of in accordance with the requirements of Section 02075 of these Specifications.

L. Storage: All materials removed shall remain the property of the Owner and shall be carefully moved and stored on the plant site where directed by the Engineer. Mechanical and electrical equipment shall be stored indoors. If the equipment is too large to store indoors, it shall be stored outdoors above ground and under cover.

M. Disposal: The Engineer will direct the Contractor to assume ownership of and dispose of off site any removed equipment, piping and materials which the Engineer deems worthless. The cost of disposing of any or all of the removed equipment, piping and materials shall be included in the lump sum prices bid and no separate payment will be made therefore.

END OF SECTION

Part 1 General

1.01 Scope

A. Clearing and grubbing includes, but is not limited to, removing from the Project site, trees, stumps, roots, brush, structures, abandoned utilities, trash, debris and all other materials found on or near the surface of the ground in the construction area and understood by generally accepted engineering practice not to be suitable for construction of the type contemplated. Precautionary measures that prevent damage to existing features to remain is part of the Work.

B. Clearing and grubbing operations shall be coordinated with temporary and permanent erosion and sedimentation control procedures.

1.02 Quality Assurance

A. The Contractor shall comply with applicable codes, ordinances, rules, regulations and laws of local, municipal, state or federal authorities having jurisdiction over the Project. All required permits of a temporary nature shall be obtained for construction operations by the Contractor.

B. Open burning is not allowed.

1.03 Job Conditions

Location of the Work: The area to be cleared and grubbed is shown schematically on the Drawings or specified below. It includes all areas designated for construction.

Part 2 Products

2.01 Equipment

The Contractor shall furnish equipment of the type normally used in clearing and grubbing operations including, but not limited to, tractors, trucks, and loaders.

Part 3 Execution

3.01 Scheduling of Clearing

A. The Contractor shall clear at each construction site only that length of the right-of-way, permanent or construction easement which would be the equivalent of one month's pipe laying. This length shall be determined from the Contractor's Progress Schedule.

B. The Engineer may permit clearing for additional lengths of the pipe line provided that temporary erosion and sedimentation controls are in place and a satisfactory stand of temporary grass is established. Should a satisfactory stand of grass not be possible,

no additional clearing shall be permitted beyond that specified above.

C. A satisfactory stand of grass shall have no bare spots larger than one square yard. Bare spots shall be scattered and the bare area shall not comprise more than one percent of any given area.

3.02 Clearing and Grubbing

A. Clear and grub, as required, on each side of the pipeline before excavating. Remove all trees, growth, debris, stumps and other objectionable matter. Clear the construction easement or road right-of-way only if necessary.

B. Materials to be cleared, grubbed and removed from the Project site include, but are not limited to, all trees, stumps, roots, brush, trash, organic matter, paving, miscellaneous structures, houses, debris and abandoned utilities.

C. Grubbing shall consist of completely removing roots, stumps, trash and other debris from all graded areas so that topsoil is free of roots and debris. Topsoil is to be left sufficiently clean so that further picking and raking will not be required.

D. All stumps, roots, foundations and planking embedded in the ground shall be removed and disposed of. Piling and butts of utility poles shall be removed to a minimum depth of two feet below the limits of excavation for structures, trenches and roadways or two feet below finish grade, whichever is lower.

E. Landscaping features shall include, but are not necessarily limited to, fences, mailboxes, cultivated trees, cultivated shrubbery, property corners, man-made improvements, subdivision and other signs within the right-of-way and easement. The Contractor shall take extreme care in moving landscape features and promptly re-establishing these features.

F. Surface rocks and boulders shall be grubbed from the soil and removed from the site if not suitable as rip rap.

G. Where the tree limbs interfere with utility wires, or where the trees to be felled are in close proximity to utility wires, the tree shall be taken down in sections to eliminate the possibility of damage to the utility.

H. Any work pertaining to utility poles shall comply with the requirements of the appropriate utility.

I. All fences adjoining any excavation or embankment that, in the Contractor's opinion, may be damaged or buried, shall be carefully removed, stored and replaced. Any fencing that, in the Engineer's opinion, is significantly damaged shall be replaced with new fence material.

J. The Contractor shall exercise special precautions for the protection and preservation of trees, cultivated shrubs, sod, fences, etc. situated within the limits of the construction area but not directly within excavation and/or fill limits. The Contractor

shall be held liable for any damage the Contractor's operations have inflicted on such property.

K. The Contractor shall be responsible for all damages to existing improvements resulting from Contractor's operations.

3.03 Disposal of Debris

A. The debris resulting from the clearing and grubbing operation shall be hauled to a disposal site secured by the Contractor and shall be disposed of in accordance with all requirements of federal, state, county and municipal regulations. No debris of any kind shall be deposited in any stream or body of water, or in any street or alley. No debris shall be deposited upon any private property except with written consent of the property owner. In no case shall any material or debris be left on the Project, shoved onto abutting private properties or buried on the Project.

END OF SECTION

Part 1 General

1.01 Scope

A. The work under this Section consists of furnishing all labor, equipment and materials and performing all operations in connection with the trench excavation and backfill required to install the pipelines shown on the Drawings and as specified.

B. Excavation shall include the removal of any trees, stumps, brush, debris or other obstacles which remain after the clearing and grubbing operations, which may obstruct the work, and the excavation and removal of all earth, rock or other materials to the extent necessary to install the pipe and appurtenances in conformance with the lines and grades shown on the Drawings and as specified.

C. Backfill shall include the refilling and compaction of the fill in the trenches and excavations up to the surrounding ground surface or road grade at crossing.

D. The trench is divided into five specific areas:

1. Foundation: The area beneath the bedding, sometimes also referenced to as trench stabilization.

2. Bedding: The area above the trench bottom (or foundation) and below the bottom of the barrel of the pipe.

3. Haunching: The area above the bottom of the barrel of the pipe up to a specified height above the bottom of the barrel of the pipe.

4. Initial Backfill: The area above the haunching material and below a plane 18-inches above the top of the barrel of the pipe.

5. Final Backfill: The area above a plane 18-inches above the top of the barrel of the pipe.

E. The choice of method, means, techniques and equipment rests with the Contractor. The Contractor shall select the method and equipment for trench excavation and backfill depending upon the type of material to be excavated and backfilled, the depth of excavation, the amount of space available for operation of equipment, storage of excavated material, proximity of man-made improvements to be protected, available easement or right-of-way and prevailing practice in the area.

1.02 Quality Assurance

A. Density: All references to “maximum dry density” shall mean the maximum dry density defined by the “Maximum Density-Optimum Moisture Test”, ASTM D 698. Determination of the density of foundation, bedding, haunching, or backfill materials in place shall meet with the requirements of ASTM D 1556, “Density of Soil In Place by the Sand Cone Method”, ASTM D 2937, “Density of Soil In Place by the

Drive-Cylinder Method" or ASTM D 2922, "Density of Soil and Soil-Aggregate In Place by Nuclear Methods (Shallow Depth)".

B. Sources and Evaluation Testing: Testing of materials to certify conformance with the Specifications shall be performed by an independent testing laboratory at no cost to the Owner. The Contractor's testing laboratory shall perform tests, at no cost to the Owner, upon change of source and at sufficient intervals during the work to certify conformance of all select material furnished for use on this Project.

1.03 Safety

Perform all trench excavation and backfilling activities in accordance with the Occupational Safety and Health Act of 1970 (PL 91-596), as amended. The Contractor shall pay particular attention to the Safety and Health Regulations Part 1926, Subpart P "Excavation, Trenching & Shoring" as described in OSHA publication 2226.

Part 2 Products

2.01 Trench Foundation Materials

A. Crushed stone or surge stone shall be utilized for trench foundation (trench stabilization).

B. Crushed stone shall be crushed limestone and shall meet the requirements of the Tennessee Department of Transportation Specification 903.11. Stone size shall be between No. 57 and No. 4, inclusive, as determined by the Tennessee Department of Transportation Specification 903.22.

C. Surge stone shall be crushed limestone and shall meet the requirements of the Tennessee Department of Transportation Specification 903.11. Stone size shall be No. 1, inclusive, as determined by the Tennessee Department of Transportation Specification 903.22.

2.02 Bedding and Haunching Materials

A. Unless specified otherwise, bedding and haunching materials shall be crushed stone or earth materials as specified below.

B. Crushed stone utilized for bedding and haunching shall meet the requirements of the Tennessee Department of Transportation Specification 903.11. Stone size shall be between No. 57 and No. 4, inclusive, as determined by the Tennessee Department of Transportation Specification 903.22.

C. Earth materials utilized for bedding and haunching shall be suitable materials selected from materials excavated from the trench. Suitable materials shall be clean and free of rock larger than 2-inches at its largest dimension, organics, cinders, stumps, limbs, frozen earth or mud, man-made wastes and other unsuitable materials. Should the

material excavated from the trench be saturated, the saturated material may be used as earth material, provided it is allowed to dry properly and it is capable of meeting the specified compaction requirements. When necessary, earth bedding and haunching materials shall be moistened to facilitate compaction by tamping. If materials excavated from the trench are not suitable for use as bedding or haunching material, provide select material conforming to the requirements of this Section at no additional cost to the Owner.

D. Filter Fabric

1. Filter fabric associated with bedding shall be a polypropylene woven fabric. The fabric shall be a high modulus type with good separation capabilities. The fabric shall be inert to biological degradation and naturally occurring chemicals, alkalies and acids.

2. The fabric shall have an equivalent opening size (EOS or AOS) of 20 to 45. The fabric shall also conform to the minimum property values listed in the following table:

Fabric Property	Unit	Test Method	Minimum Value
Grab Tensile Strength	lbs.	ASTM D 4632	200
Grab Tensile Elongation	%	ASTM D 4632	30 (max.)
Mullen Burst Strength	psi	ASTM D 3786	400
Trapezoid Tear Strength	lbs.	ASTM D 4533	75
Puncture Strength	lbs.	ASTM D 3787	75

3. If ordered by the Engineer, the filter fabric manufacturer shall furnish the services of a competent factory representative to supervise and/or inspect the installation of pipe. This service will be furnished for a minimum of 10 days during initial pipe installation.

4. Filter fabric shall be Mirafi 500X, Amoco 2002 or Exxon GTF-200.

E. Bedding and haunching material in roadways shall be crushed stone.

2.03 Initial Backfill

A. Unless shown on Drawings or specified otherwise, initial backfill material shall be crushed stone or earth materials as specified for bedding and haunching materials.

B. Earth materials utilized for initial backfill shall be suitable materials selected from materials excavated from the trench. Suitable materials shall be clean and free of rock larger than 2-inches at its largest dimension, organics, cinders, stumps, limbs, frozen earth or mud, man-made wastes and other unsuitable materials. Should the material excavated from the trench be saturated, the saturated material may be used as earth material, provided it is allowed to dry properly and it is capable of meeting the

specified compaction requirements. When necessary, initial backfill materials shall be moistened to facilitate compaction by tamping. If materials excavated from the trench are not suitable for use as initial backfill material, provide select material conforming to the requirements of this Section.

C. Initial backfill in roadways shall be crushed stone.

2.04 Final Backfill

A. Final backfill material shall be general excavated earth materials, shall not contain rock larger than 3-inches at its greatest diameter, cinders, stumps, limbs, man-made wastes and other unsuitable materials. If materials excavated from the trench are not suitable for use as final backfill material, provide select material conforming to the requirements of this Section.

B. Final backfill in roadways shall be crushed stone, unless otherwise noted.

2.05 Select Backfill

Select backfill shall be materials which meet the requirements as specified for bedding, haunching, initial backfill or final backfill materials, including compaction requirements.

2.06 Concrete

Concrete for bedding, haunching, initial backfill or encasement shall have a compressive strength of not less than 3,000 psi, with not less than 5.5 bags of cement per cubic yard and a slump between 3 and 5-inches. Ready-mixed concrete shall be mixed and transported in accordance with ASTM C 94. Reinforcing steel shall conform to the requirements of ASTM A 615, Grade 60.

Part 3 Execution

3.01 Trench Excavation

A. Topsoil and grass shall be stripped a minimum of 6-inches over the trench excavation site and stockpiled separately for replacement over the finished grading areas.

B. Trenches shall be excavated to the lines and grades shown on the Drawings with the centerlines of the trenches on the centerlines of the pipes and to the dimensions which provide the proper support and protection of the pipe and other structures and accessories.

C. Trench Width for Pipelines

1. The sides of all trenches shall be vertical to a minimum of one foot above the top of the pipe. Unless otherwise indicated on the Drawings, the maximum trench width shall be equal to the sum of the outside diameter of the pipe plus

two feet. The minimum trench width shall be that which allows the proper consolidation of the haunching and initial backfill material.

2. Excavate the top portion of the trench to any width within the construction easement or right-of-way which will not cause unnecessary damage to adjoining structures, roadways, pavement, utilities, trees or private property. Where necessary to accomplish this, provide sheeting and shoring.

3. Where rock is encountered in trenches, excavate to remove boulders and stones to provide a minimum of 6-inches clearance between the rock and any part of the pipe barrel or manhole.

4. Wherever the prescribed maximum trench width is exceeded, the Contractor shall use the next higher Class or Type of bedding and haunching as shown on the Drawings for the full trench width as actually cut. The excessive trench width may be due to unstable trench walls, inadequate or improperly placed bracing and sheeting which caused sloughing, accidental over-excavation, intentional over-excavation necessitated by the size of the Contractor's tamping and compaction equipment, intentional over-excavation due to the size of the Contractor's excavation equipment, or other reasons beyond the control of the Engineer or Owner.

D. Depth

1. The trenches shall be excavated to the required depth or elevation which allow for the placement of the pipe and bedding to the dimensions shown on the Drawings.

2. Force Mains and Water Mains

a. Depth of Trenches: Excavate trenches to provide depths as shown on the Drawings. The depth of cover shall not exceed that as shown on the Drawings by more than one foot, without approval of the Engineer.

b. Excavate trenches to provide a minimum cover not less than three feet. Within the right-of-way of highways, streets or roadways, excavate to place the top of the pipe a minimum of four feet below the nearest pavement edge or drainage ditch.

c. Increase the depth of cover where specifically shown on the Drawings and where necessary to avoid interference with underground utilities and obstructions.

3. Where rock is encountered in trenches for pipelines, excavate to the minimum depth which will provide clearance below the pipe barrel of 8-inches for pipe 21-inches in diameter and smaller and 12-inches for larger pipe, valves and manholes. Remove boulders and stones to provide a minimum of 6-inches clearance between the rock and any part of the pipe, manhole or accessory.

E. Excavated Materials

1. Excavated materials shall be placed adjacent to the work to be used for backfilling as required. Top soil shall be carefully separated and lastly placed in its original location.

2. Excavated material shall be placed sufficiently back from the edge of the excavation to prevent caving of the trench wall, to permit safe access along the trench and not cause any drainage problems. Excavated material shall be placed so as not to damage existing landscape features or man-made improvements.

3.02 Sheeting, Bracing and Shoring

A. Sheeting, bracing and shoring shall be performed in the following instances:

1. Where sloping of the trench walls does not adequately protect persons within the trench from slides or cave-ins.

2. In caving ground.

3. In wet, saturated, flowing or otherwise unstable materials. The sides of all trenches and excavations shall be adequately sheeted, braced and shored.

4. Where necessary to prevent damage to adjoining buildings, structures, roadways, pavement, utilities, trees or private properties which are required to remain.

5. Where necessary to maintain the top of the trench within the available construction easement or right-of-way.

B. In all cases, excavation protection shall strictly conform to the requirements of the Occupational Safety and Health Act of 1970, as amended.

C. Timber: Timber for shoring, sheeting, or bracing shall be sound and free of large or loose knots and in good, serviceable condition. Size and spacing shall be in accordance with OSHA regulations.

D. Steel Sheeting and Sheet Piling: Steel sheet piling shall be the continuous interlock type. The weight, depth and section modulus of the sheet piling shall be sufficient to restrain the loads of earth pressure and surcharge from existing foundations and live loads. Procedure for installation and bracing shall be so scheduled and coordinated with the removal of the earth that the ground under existing structures shall be protected against lateral movement at all times. The Contractor shall provide closure and sealing between sheet piling and existing facilities.

E. Trench Shield: A trench shield or box may be used to support the trench walls. The use of a trench shield does not necessarily preclude the additional use of bracing and sheeting. When trench shields are used, care must be taken to avoid disturbing the alignment and grade of the pipe or disrupting the haunching of the pipe as the shield

is moved. When the bottom of the trench shield extends below the top of the pipe, the trench shield will be raised in 6-inch increments with specified backfilling occurring simultaneously. At no time shall the trench shield be “dragged” with the bottom of the shield extending below the top of the pipe or utility.

F. Remove bracing and sheeting in units when backfill reaches the point necessary to protect the pipe and adjacent property. Leave sheeting in place when in the opinion of the Engineer it cannot be safely removed or is within three feet of an existing structure, utility, or pipeline. Cut off any sheeting left in place at least two feet below the surface.

G. Sheet piling within three feet of an existing structure or pipeline shall remain in place, unless otherwise directed by the Engineer.

3.03 Rock Excavation

A. Definition of Rock: Any material which cannot be excavated with conventional excavating equipment, and is removed by drilling and blasting, and occupies an original volume of at least one-half cubic yard.

B. Blasting: Provide licensed, experienced workmen to perform blasting. Conduct blasting operations in accordance with all existing ordinances and regulations. Protect all buildings and structures from the effects of the blast. Repair any resulting damage. If the Contractor repeatedly uses excessive blasting charges or blasts in an unsafe or improper manner, the Engineer may direct the Contractor to employ an independent blasting consultant to supervise the preparation for each blast and approve the quantity of each charge.

C. Removal of Rock: Dispose of rock off site that is surplus or not suitable for use as rip rap or backfill.

D. The Contractor shall notify the Engineer prior to any blasting. Additionally, the Contractor shall notify the Engineer before any charge is set.

E. Following review by the Engineer regarding the proximity of permanent buildings and structures to the blasting site, the Engineer may direct the Contractor to employ an independent, qualified specialty sub- contractor, approved by the Engineer, to monitor the blasting by use of seismograph, identify the areas where light charges must be used, conduct pre-blast and post-blast inspections of structures, including photographs or videos, and maintain a detailed written log.

3.04 Dewatering Excavations

A. The Contractor, at his own expense, shall provide adequate facilities for promptly removing water from all excavations. Dewater the excavation continuously to maintain a water level two feet below the bottom of the trench.

B. Control drainage in the vicinity of excavation so the ground surface is properly pitched to prevent water running into the excavation.

C. There shall be sufficient pumping equipment, in good working order, available at all times, to remove any water that accumulates in excavations. Where the utility crosses natural drainage channels, the work shall be conducted in such a manner that unnecessary damage or delays in the prosecution of the work will be prevented. Provision shall be made for the satisfactory disposal of surface water to prevent damage to public or private property.

D. In all cases, accumulated water in the trench shall be removed before placing bedding or haunching, laying pipe, placing concrete or backfilling.

E. Where dewatering is performed by pumping the water from a sump, crushed stone shall be used as the medium for conducting the water to the sump. Sump depth shall be at least two feet below the bottom of the trench. Pumping equipment shall be of sufficient quantity and/or capacity to maintain the water level in the sump two feet below the bottom of the trench. Pumps shall be a type such that intermittent flows can be discharged. A standby pump shall be required in the event the operating pump or pumps clog or otherwise stop operation.

F. Dewater by use of a well point system when pumping from sumps does not lower the water level two feet below the trench bottom. Where soil conditions dictate, the Contractor shall construct well points cased in sand wicks. The casing, 6 to 10-inches in diameter, shall be jetted into the ground, followed by the installation of the well point, filling casing with sand and withdrawing the casing.

3.05 Trench Foundation and Stabilization

A. The bottom of the trench shall provide a foundation to support the pipe and its specified bedding. The trench bottom shall be graded to support the pipe and bedding uniformly throughout its length and width.

B. If, after dewatering as specified above, the trench bottom is spongy, or if the trench bottom does not provide firm, stable footing and the material at the bottom of the trench will still not adequately support the pipe, the trench will be determined to be unsuitable and the Engineer shall then authorize payment for trench stabilization.

C. Should the undisturbed material encountered at the trench bottom constitute, in the opinion of the Engineer, an unstable foundation for the pipe, the Contractor shall be required to remove such unstable material and fill the trench to the proper subgrade with crushed stone or class “C” concrete as directed by the Engineer.

D. Where the replacement of unsuitable material with crushed stone does not provide an adequate trench foundation, the trench bottom shall be excavated to a depth of at least two feet below the specified trench bottom. Place filter fabric in the bottom of the trench and support the fabric along the trench walls until the trench stabilization, bedding, haunching and pipe have been placed at the proper grade. The ends of the filter fabric shall be overlapped above the pipe.

E. Where trench stabilization is provided, the trench stabilization material shall be

compacted to at least 90 percent of the maximum dry density, unless shown or specified otherwise.

3.06 Bedding and Haunching

A. Prior to placement of bedding material, the trench bottom shall be free of any water, loose rocks, boulders or large dirt clods.

B. Bedding material shall be placed to provide uniform support along the bottom of the pipe and to place and maintain the pipe at the proper elevation. The initial layer of bedding placed to receive the pipe shall be brought to the grade and dimensions indicated on the Drawings. All bedding shall extend the full width of the trench bottom. The pipe shall be placed and brought to grade by tamping the bedding material or by removal of the excess amount of the bedding material under the pipe. Adjustment to grade line shall be made by scraping away or filling with bedding material. Wedging or blocking up of pipe shall not be permitted. Applying pressure to the top of the pipe, such as with a backhoe bucket, to lower the pipe to the proper elevation or grade shall not be permitted. Each pipe section shall have a uniform bearing on the bedding for the length of the pipe, except immediately at the joint.

C. At each joint, excavate bell holes of ample depth and width to permit the joint to be assembled properly and to relieve the pipe bell of any load.

D. After the pipe section is properly placed, add the haunching material to the specified depth. The haunching material shall be shovel sliced, tamped, vigorously chinked or otherwise consolidated to provide uniform support for the pipe barrel and to fill completely the voids under the pipe, including the bell hole. Prior to placement of the haunching material, the bedding shall be clean and free of any water, loose rocks, boulders or dirt clods.

E. Bedding & Haunching Classifications

1. Class “A” (Bedding Factor - 2.8): Excavate the bottom of the trench flat at a minimum depth as shown on the Drawings, below the bottom of the pipe barrel. Lay pipe to line and grade on concrete block. Place concrete to the full width of the trench and to a height of one-fourth of the outside diameter of the pipe above the invert.

2. Class “B” (Bedding Factor - 1.9): Excavate the bottom of the trench flat at a minimum depth as shown on the Drawings, below the bottom of the pipe barrel. Place and compact bedding material to the proper grade. Haunching material shall then be carefully placed by hand and compacted to provide full support under and up to the centerline of the pipe.

3. Class “C” (Bedding Factor - 1.5): Excavate the bottom of the trench flat at a minimum depth as shown on the Drawings, below the bottom of the pipe barrel. Place and compact bedding material to the proper grade. Haunching material shall then be carefully placed by hand and compacted to provide full support under and up to a height of one-fourth the outside diameter of the pipe above

the bottom of the pipe barrel.

4. Type 5: Excavate the bottom of the trench flat at a minimum depth as shown on the Drawings, below the bottom of the pipe barrel. Place and compact bedding material to the proper grade before installing pipe. After the pipe has been brought to the proper grade, haunching material shall be carefully placed by hand and compacted to the top of the pipe.

5. Special Pipe Conditions Bedding: Excavate the bottom of the trench flat at a minimum depth as shown on the Drawings, below the bottom of the pipe barrel. Place and compact bedding material to the proper grade. Haunching material shall then be carefully placed by hand and compacted to 6-inches above the top of the pipe.

F. Manholes: Excavate to a minimum of 12-inches below the planned elevation of the base of the manhole. Place and compact crushed stone bedding material to the required grade before constructing the manhole.

G. Pipe Bedding & Haunching Requirements

1. Gravity Sewers and Accessories: Lay all gravity sewer with crushed stone bedding and haunching in accordance with Special Conditions Pipe Bedding requirements. Any variations must be approved by the Owner.

2. Force Mains and Water Mains (DIP and PVC): Lay all pressure mains with bedding and haunching of suitable earth material or crushed stone, unless noted otherwise in the Drawings. The Owner reserves the right to specify the use of crushed stone or concrete if conditions warrant.

3. Special Requirements

a. In areas where rock is encountered, bedding and haunching material shall be crushed stone. Crushed stone bedding shall extend a minimum of 6-inches below the pipe and haunching to 6-inches above the pipe.

b. Where the depth of cover over the piping exceeds 18 feet, the pipe bedding shall meet the requirements of Special Conditions Pipe Bedding.

c. For open-cut pipe installations beneath roadways, bedding and haunching shall be in accordance with Special Conditions Pipe Bedding.

d. Type 5 or Special Conditions Pipe Bedding called for on the Drawings, specified or ordered by the Engineer, shall meet requirements for Type 5 or Special Conditions Pipe Bedding, utilizing crushed stone bedding and haunching material.

H. Excessive Width and Depth

1. Gravity Sewers: If the trench is excavated to excess width, provide the bedding class with the next higher bedding factor. Crushed stone haunching and initial

backfill may be used in lieu of Class “A” bedding, where Class “A” bedding is necessitated by excessive trench width.

2. Force Mains and Water Mains: If the trench is excavated to excess width, provide the next higher type or class of pipe bedding, but a minimum of Type 5, as detailed on the Drawings.

3. If the trench is excavated to excessive depth, provide crushed stone to place the bedding at the proper elevation or grade.

I. Compaction: Bedding and haunching materials under pipe, manholes and accessories shall be compacted to a minimum of 90 percent of the maximum dry density, unless shown or specified otherwise.

3.07 Initial Backfill

A. Initial backfill shall be placed to anchor the pipe, protect the pipe from damage by subsequent backfill and ensure the uniform distribution of the loads over the top of the pipe.

B. Place initial backfill material carefully around the pipe in uniform layers to a depth of at least 18-inches above the pipe barrel. Layer depths shall be a maximum of 6-inches for pipe 18-inches in diameter and smaller and a maximum of 12-inches for pipe larger than 18-inches in diameter.

C. Backfill on both sides of the pipe simultaneously to prevent side pressures.

D. Compact each layer thoroughly with suitable hand tools or tamping equipment.

E. Initial backfill shall be compacted to a minimum 90 percent of the maximum dry density, unless shown or specified otherwise.

F. In areas where the trench is cut into rock or where suitable backfill is unavailable, crushed stone shall be used for initial backfill up to 6-inches above the pipe barrel.

G. If materials excavated from the trench are not suitable for use as backfill materials, provide select backfill material conforming to the requirements of this Section.

3.08 Concrete Encasement for Pipelines

Where concrete encasement is shown on the Drawings for pipelines, excavate the trench to provide a minimum of 6-inches clearance from the bell of the pipe. Lay the pipe to line and grade on concrete blocks. In lieu of bedding, haunching and initial backfill, place concrete to the full width of the trench and to a height of not less than 6-inches above the pipe bell. Do not backfill the trench for a period of at least 24 hours after concrete is placed.

3.09 Final Backfill

A. Backfill carefully to restore the ground surface to its original condition.

B. The top 6-inches shall be topsoil obtained as specified in “Trench Excavation” of this Section.

C. Excavated material which is unsuitable for backfilling and excess material, shall be disposed of, at no additional cost to the Owner, in a manner approved by the Engineer. Surplus soil may be distributed and spread over the site if approved by the Engineer. If such spreading is allowed, the site shall be left in a clean and sightly condition and shall not affect pre-construction drainage patterns. Surplus rock from the trenching operations shall be removed from the site.

D. If materials excavated from the trench are not suitable for use as backfill materials, provide select backfill material conforming to the requirements of this Section.

E. After initial backfill material has been placed and compacted, backfill with final backfill material. Place backfill material in uniform layers, compacting each layer thoroughly as follows:

1. In 6-inch layers, if using light power tamping equipment, such as a “jumping jack”.

2. In 12-inch layers, if using heavy tamping equipment, such as hammer with tamping feet.

3. In 24-inch layers, if using a hydra-hammer.

F. Settlement: If trench settles, re-fill and grade the surface to conform to the adjacent surfaces.

G. Final backfill shall be compacted to a minimum 90 percent of the maximum dry density, unless specified otherwise.

3.10 Backfill Under Roads

Compact backfill underlying pavement and sidewalks, and backfill under dirt and gravel roads to a minimum 95 percent of the maximum dry density. The top 12-inches shall be compacted to a minimum of 98 percent of the maximum dry density.

3.11 Backfill Within Tennessee DOT Right-of-Way

Backfill within the Tennessee DOT right-of-way shall meet all requirements, standards, and specifications stipulated by the Tennessee Department of Transportation.

3.12 Backfill Along Restrained Joint Pipe

Backfill along restrained joint pipe shall be compacted to a minimum 90 percent of the maximum dry density.

3.13 Detection Wire

Detection wire shall be 12 gauge THHN (Thermo High Heat Nylon) copper locator wire and shall be provided over all PVC pipe.

3.14 Testing and Inspection

A. The soils testing laboratory is responsible for the following:

1. Compaction tests in accordance with Article 1.02 of this Section.

2. Field density tests for each two feet of lift, one test for each 2,000 feet of pipe installed or more frequently if ordered by the Engineer.

3. Inspecting and testing stripped site, subgrades and proposed fill materials.

B. The Contractor's duties relative to testing include:

1. Notifying laboratory of conditions requiring testing.

2. Coordinating with laboratory for field testing.

3. Paying costs for additional testing performed beyond the scope of that required and for re-testing where initial tests reveal non-conformance with specified requirements.

4. Providing excavation as necessary for laboratory personnel to conduct tests.

C. Inspection

1. Earthwork operations, acceptability of excavated materials for bedding or backfill, and placing and compaction of bedding and backfill is subject to inspection by the Engineer.

2. Foundations and shallow spread footing foundations are required to be inspected by a geotechnical engineer, who shall verify suitable bearing and construction.

D. Comply with applicable codes, ordinances, rules, regulations and laws of local, municipal, state or federal authorities having jurisdiction.

END OF SECTION

Part 1 General

1.01 Scope

The work to be performed under this Section shall consist of removing and replacing existing pavement, sidewalks and curbs in paved areas where such have been removed for construction of water mains, fire hydrants, sewers, manholes, and all other water and sewer appurtenances and structures.

1.02 Submittals

Certificates: Provide certificates stating that materials supplied comply with Specifications. Certificates shall be signed by the asphalt producer and the

1.03 Conditions

A. Weather Limitations

1. Do not conduct paving operations when surface is wet or contains excess of moisture which would prevent uniform distribution and required penetration.

2. Construct prime and tack coats, and asphaltic courses only when atmospheric temperature in the shade is above 50 degrees F, when the underlying base is dry and when weather is not rainy.

3. Place base course when air temperature is above 35 degrees F and rising.

B. Grade Control: Establish and maintain the required lines and grades for each course during construction operations.

Part 2 Products

2.01 Materials

A. Mineral Aggregate Base Course: Mineral aggregate base course shall conform to the requirements of the Tennessee Department of Transportation Bureau of Highways Standard Specifications for Road and Bridge Construction, Section 303, Type A base.

B. Bituminous Plant Mix Base (Hot Mix): The base of all paved roadways shall conform to the requirements of Section 307 of the Tennessee Department of Transportation Bureau of Highways Standard Specifications for Road and Bridge Construction.

C. Bituminous Sand-Gravel Binder Course: The binder course of all paved roadways shall conform to the requirements of Section 409 of the Tennessee Department of Transportation Bureau of Highways Standard Specifications for Road and Bridge Construction.

D. Asphaltic Concrete Surface (Hot Mix): The surface course for all pavement shall

conform to the requirements of the Tennessee Department of Transportation Bureau of Highways Standard Specifications for Road and Bridge Construction, Section 411, Grading “E”.

E. Double Bituminous Surface Treatment: The surface for all pavements shall conform to the requirements of the Tennessee Department of Transportation Bureau of Highways Standard Specifications for Road and Bridge Construction, Section 404.

F. Concrete: Provide concrete and reinforcing for concrete pavement or base courses in accordance with the requirements of the Tennessee Department of Transportation Bureau of Highways Standard Specifications for Road and Bridge Construction, Section 501.

G. Special Surfaces: Where driveways or roadways are disturbed or damaged which are constructed of specialty type surfaces, e.g. brick or stone, these driveways and roadways shall be restored utilizing similar, if not original, materials. Where the nature of these surfaces dictate, a specialty contractor shall be used to restore the surfaces to their previous or better condition. Special surfaces shall be removed and replaced to the limits to which they were disturbed.

2.02 Types of Pavements

A. General: All existing pavement removed, destroyed or damaged by construction shall be replaced with the same type and thickness of pavement as that existing prior to construction, unless otherwise directed by the Engineer. Materials, equipment and construction methods used for paving work shall conform to the Tennessee Department of Transportation Bureau of Highways specifications applicable to the particular type required for replacement, repair or new pavements.

B. Aggregate Base: Aggregate base shall be constructed in accordance with the requirements of Section 303, Type A base of the Tennessee Department of Transportation Bureau of Highways Standard Specifications for Road and Bridge Construction. Material shall be mixed and placed by the stationary plant method. If the finished compacted base course depth is 6-inches or more, the course shall be constructed in two or more layers of approximately equal thickness.

C. Concrete Pavement: Concrete pavement or base courses shall be replaced with concrete. The surface finish of the replaced concrete pavement shall conform to that of the existing pavement. The surface of the replaced concrete base course shall be left rough. The slab depth shall be equivalent to the existing concrete pavement or base course, but in no case less than 6-inches thick. Transverse and longitudinal joints removed from concrete pavement shall be replaced at the same locations and to the same types and dimensions as those removed. Concrete pavements or concrete base courses shall be reinforced and shall conform to the Tennessee Department of Transportation Bureau of Highways Standard Specifications, Section 501.

D. Asphalt Concrete Base, Binder and Surface Course: Asphalt concrete base, binder and surface course construction shall conform to the Tennessee Department of

Transportation Bureau of Highways Standard Specifications, Section 307 for bituminous plant mix base course, Section 409 for bituminous sand-gravel binder course and Section 411, Grading “E” for asphalt concrete surface course. The pavement mixture shall not be spread until the designated surface has been previously cleaned and prepared, is intact, compacted as specified herein, properly cured, dry and the prime and/or tack coat has been applied. Apply and compact the asphalt concrete in maximum layer thickness by asphalt spreader equipment of design and operation approved by the Engineer. After compaction, the asphalt concrete shall be smooth and true to established profiles and sections. Immediately correct any high, low or defective areas by cutting out the course, replacing with fresh hot mix, and immediately compacting to conform and thoroughly bond to the surrounding area.

E. Double Bituminous Surface Treatment: Double bituminous surface treatment shall be replaced with a minimum thickness of 1-inch conforming to Section 404 of the Tennessee Department of Transportation Bureau of Highways Standard Specifications. No bituminous surface shall be installed between October 15 and April 15, and only when the air and pavement temperatures in the shade are above 60 degrees F.

F. Gravel Surfaces: Existing gravel road, drive and parking area replacement shall meet the requirements of aggregate base course. This surfacing may be authorized by the Engineer as a temporary surface for paved streets until replacement of hard surfaced pavement is authorized.

G. Temporary Measures: During the time period between pavement removal and complete replacement of permanent pavement, maintain highways, streets and roadways by the use of steel running plates anchored to prevent movement. The backfill above the pipe shall be compacted, as specified elsewhere, up to the existing pavement surface to provide support for the steel running plates. All pavement shall be replaced within seven calendar days of its removal.

Part 3 Execution

3.01 Removing Pavement

A. General: Remove existing pavement as necessary for installing the pipe line and appurtenances.

B. Marking: Before removing any pavement, mark the pavement neatly paralleling pipe lines and existing street lines. Space the marks the width of the trench.

C. Breaking: Break asphalt pavement along the marks using pavement shearing equipment, jack hammers or other suitable tools. Break concrete pavement along the marks by scoring with a rotary saw and breaking below the score by the use of jack hammers or other suitable tools.

D. Machine Pulling: Do not pull pavement with machines until the pavement is completely broken and separated from pavement to remain.

E. Damage to Adjacent Pavement: Do not disturb or damage the adjacent pavement. If the adjacent pavement is disturbed or damaged, remove and replace the damaged pavement.

F. Damage to Traffic Signal Loops: Any pavement removal which will include removal of traffic signal loops embedded in the pavement shall be coordinated with the Traffic Engineering Department having jurisdiction over the traffic signal five days prior to pavement removal.

G. Sidewalk: Remove and replace any sidewalks disturbed by construction for their full width and to the nearest undisturbed joint.

H. Curbs: Tunnel under or remove and replace any curb disturbed by construction to the nearest undisturbed joint.

3.02 Replacing Pavement

A. Preparation of Subgrade: During backfilling and compaction of the backfill, arrange to have the compaction tested by an independent testing laboratory. After compaction testing has been satisfactorily completed, replace all pavements, sidewalks and curbs removed.

1. The existing street pavement or surface shall be removed along the lines of the work for the allowable width specified for the trench or structure. After the installation of the sewerage or water works facilities and after the backfill has been compacted suitably, the additional width of pavement to be removed, as shown on the Drawings, shall be done immediately prior to replacing the pavement.

2. Trench backfill shall be compacted for the full depth of the trench as specified in Section 31 23 33 of these Specifications.

3. Temporary trench backfill along streets and driveways shall include 6-inches of crushed stone or cherty clay as a temporary surfacing of the trenches. This temporary surface shall be maintained carefully at grade and dust-free by the Contractor until the backfill of the trench has thoroughly compacted in the opinion of the Engineer and permission is granted to replace the street pavement.

4. When temporary crushed stone or chert surface is considered by the Engineer to be sufficient surface for gravel pavement, the surface shall be graded smooth and to an elevation that will make the final permanent surfacing level with the adjacent surfacing that was undisturbed.

B. Pavement Replacement

1. Prior to replacing pavement, make a final cut in concrete pavement 12-inches back from the edge of the damaged pavement with a concrete saw. Remove

asphalt pavement 12-inches back from the edge of the damaged pavement using pavement shearing equipment, jack hammers or other suitable tools.

2. Replace all street and roadway pavement as shown on the Drawings. Replace driveways, sidewalks and curbs with the same material, to nearest existing undisturbed construction joint and to the same dimensions as those existing.

3. If the temporary crushed stone or chert surface is to be replaced, the top 6-inches shall be removed and the crushed stone surfacing for unpaved streets or the base for the bituminous surface shall be placed.

4. Following this preparation, the chert or crushed stone base shall be primed with a suitable bituminous material and surfaced with the proper type of bituminous surface treatment.

5. Where the paved surface is to be replaced with asphaltic concrete pavement, concrete pavement or with a concrete base and a surface course, the temporary chert or crushed stone surface and any necessary backfill material, additional existing paving and new excavation shall be removed to the depth and width shown on the Drawings. All edges of the existing pavement shall be cut to a straight, vertical edge. Care shall be used to get a smooth joint between the old and new pavement and to produce an even surface on the completed street. Expansion joints, where applicable, shall be replaced in a manner equal to the original joint.

6. Where driveways or roadways, constructed of specialty type surfaces, e.g. brick or stone are disturbed or damaged, these driveways and roadways shall be restored utilizing similar materials. Where the nature of these surfaces dictate, a specialty contractor shall be used to restore the surfaces to their previous or better condition. Special surfaces shall be removed and replaced to the limits to which they were disturbed.

C. Pavement Resurfacing

1. Certain areas to be resurfaced are specified or noted on the Drawings. Where pavement to be resurfaced has been damaged with potholes, the Contractor shall remove all existing loose pavement material and fill the hole with Bituminous Plant Mix Base, as specified, to the level of the existing pavement. After all pipe line installations are complete and existing pavement has been removed and replaced along the trench route, apply tack coat and surface course as specified.

2. Resurfacing limits shall be perpendicular to the road centerline. The limits of resurfacing shall be 10 feet beyond the edge of the pavement replacement on the main road being resurfaced, and to the point of tangency of the pavement on the side streets.

D. Pavement Striping: Pavement striping removed or paved over shall be replaced with the same type, dimension and material as original unless directed otherwise by the Engineer.

E. Traffic Signal Loops: The replacement or repair of all traffic signal loops removed or damaged during the removal and replacement of pavement shall be coordinated by the Contractor with the Traffic Engineering Department having jurisdiction over each traffic signal. The Contractor shall be responsible for payment of all fees associated with replacement or repair of traffic signal loops.

3.03 Sidewalk and Curb Replacement

A. Construction

1. Whenever sidewalks are removed or disturbed in connection with construction work, they shall be replaced to the original lines and grades in fully as good or better condition than which existed prior to the Contractor's operations. All concrete sidewalks and curbs shall be replaced with class "A" concrete. Other types of sidewalks, such as brick, stone, etc., shall be replaced with material removed during the progress of the work, in equally as good or better condition as the original.

2. Preformed joints shall be 1/2-inch thick, conforming to the latest edition of AASHTO M 59 for sidewalks and AASHTO M 123 for curbs.

3. Forms for sidewalks shall be of wood or metal, shall be straight and free from warp, and shall be of sufficient strength, when in place, to hold the concrete true to line and grade without springing or distorting.

4. Forms for curbs shall be metal and of an approved section. They shall be straight and free from distortions, showing no vertical variation greater than 1/8-inch in 10 feet and no lateral variation greater than 1/4-inch in 10 feet from the true plain surface on the vertical face of the form. Forms shall be of the full depth of the structure and constructed such to permit the inside forms to be securely fastened to the outside forms.

5. Securely hold forms in place true to the lines and grades indicated on the Drawings.

6. Wood forms may be used on sharp turns and for special sections, as approved by the Engineer. Where wooden forms are used, they shall be free from warp and shall be the nominal depth of the structure.

7. All mortar and dirt shall be removed from forms and all forms shall be thoroughly oiled or wetted before any concrete is deposited.

B. When a section is removed, the existing sidewalk or curb shall be cut to a neat line, perpendicular to both the centerline and the surface of the concrete slab. Existing concrete shall be cut along the nearest existing construction joints; if such joints do not exist, the cut shall be made at minimum distances shown on the Drawings.

C. Existing concrete sidewalks and curbs that have been cut and removed for

construction purposes shall be replaced with the same width and surface as the portion removed. Sidewalks shall have a minimum uniform thickness of 4-inches. The new work shall be neatly jointed to the existing concrete so that the surface of the new work shall form an even, unbroken plane with the existing surfaces.

D. The subgrade shall be formed by excavating to a depth equal to the thickness of the concrete, plus 2-inches. Subgrade shall be of such width as to permit the proper installation and bracing of the forms. Subgrades shall be compacted by hand tamping or rolling. Soft, yielding or unstable material shall be removed and backfilled with satisfactory material. Place 2-inches of porous crushed stone under all sidewalks and curbs and compact thoroughly, then finish to a smooth, unyielding surface at proper line, grade and cross section. Immediately prior to pouring concrete, the stone shall be thoroughly wetted, or the concrete shall be poured on a layer of heavy building paper.

E. Joint for Curbs

1. Joints shall be constructed as indicated on the Drawings and as specified. Construct joints true to line with their faces perpendicular to the surface of the structure and within 1/4-inch of their designated position.

2. Thoroughly spade and compact the concrete at the faces of all joints filling all voids.

3. Install expansion joint materials at the point of curve at all street returns. Install expansion joint material behind the curb at abutment to sidewalks and adjacent structures.

4. Place contraction joints every 10 feet along the length of the curbs and gutters. Form contraction joints using steel templates or division plates which conform to the cross section of the structure. Leave the templates in place until the concrete has set sufficiently to hold its shape, but remove them while the forms are still in place. Contraction joint templates or plates shall not extend below the top of the steel reinforcement or they shall be notched to permit the reinforcement to be continuous through the joint. Contraction joints shall be a minimum of 1-1/2-inches deep.

F. Expansion joints shall be required to replace any removed expansion joints or in new construction wherever shown on the Drawings. Expansion joints shall be true and even, shall present a satisfactory appearance, and shall extend to within 1/2-inch of the top of finished concrete surface.

G. Finishing

1. Strike off the surface with a template and finish the surface with a wood float using heavy pressure, after which, contraction joints shall be made and the surface finished with a wood float or steel trowel.

2. Finish the face of the curbs at the top and bottom with an approved finishing tool of the radius indicated on the Drawings.

3. Finish edges with an approved finishing tool having a 1/4-inch radius.

4. Provide a final broom finish by lightly combing with a stiff broom after troweling is complete.

5. The finished surface shall not vary more than 1/8-inch in 10 feet from the established grade.

H. Driveway and Sidewalk Ramp Openings

1. Provide driveway openings of the widths and at the locations indicated on the Drawings and as directed by the Engineer.

2. Provide sidewalk ramp openings as indicated on the Drawings, in conformance with the applicable regulations and as directed by the Engineer.

I. Concrete shall be suitably protected from freezing and excessive heat. It shall be kept covered with burlap or other suitable material and kept wet until cured. Provide necessary barricades to protect the work. All damage caused by people, vehicles, animals, rain, the Contractor's operations and the like shall be repaired by the Contractor, at no additional expense to the Owner.

3.04 Maintenance

The Contractor shall maintain the surfaces of roadways built and pavements replaced until the acceptance of the Project. Maintenance shall include replacement, scraping, reshaping, wetting and rerolling as necessary to prevent raveling of the road material, the preservation of reasonably smooth surfaces and the repair of damaged or unsatisfactory surfaces, to the satisfaction of the Engineer. Maintenance shall include sprinkling as may be necessary to abate dust from the gravel surfaces.

3.05 Supervision and Approval

A. Pavement restoration shall meet the requirements of the regulatory agency responsible for the pavement. Obtain agency approval of pavement restorations before requesting final payment.

B. Obtain the Engineer's approval of restoration of pavement, such as private roads and drives, that are not the responsibility of a regulatory agency.

C. Complete pavement restoration as soon as possible after backfilling.

D. Failure of Pavement: Should any pavement restoration or repairs fail or settle during the life of the Contract, including the bonded period, promptly restore or repair defects.

3.06 Cleaning

The Contractor shall remove all surplus excavation materials and debris from the street surfaces and rights-of-way and shall restore street, roadway or sidewalk surfacing to its original condition.

END OF SECTION

Part 1 General

1.01 Scope

A. The scope of this section of the Specifications includes requirements for furnishing all labor, material and equipment to provide for the reconstruction of existing manholes, using an approved method of non-disruptive rehabilitation within an existing structure, which has generally maintained its original shape.

B. Supply all products and perform all work in accordance with applicable American Society for Testing and Material (ASTM), American Water Works Association (AWWA), American National Standards Institute (ANSI), or other recognized standards. Latest revisions existing on advertisement date of all standards are applicable. Where discrepancies exist between this Specification and referenced product/process standards, this Specification shall govern.

1.02 Specialty Subcontractor and Qualifying Superintendent Experience

A. The Specialty Subcontractor performing the work shall be fully qualified, experienced and equipped to complete this work expeditiously and in a satisfactory manner. The Specialty Subcontractor shall be an approved installer as certified and licensed by the manufacturer. The Contractor must certify that the proposed product/process to be used is the exact system for which any and all submittals and certifications were made. No substitutions will be allowed, and misrepresentations or omissions may be grounds for Contract termination with the Contractor waiving any and all claims against the Owner for work performed or costs incurred.

B. The proposed Qualifying superintendent of the Specialty Subcontractor for the work under this Section 33 01 30 shall have successfully installed an epoxy resin-based manhole lining product in a minimum of 500 manholes/structures as documented by verifiable Owner references. The Owner must approve both the Specialty Subcontractor and the Qualifying Superintendent to perform this work. The approved superintendent shall be on-site during the execution of all lining operations including prep work and holiday testing. The lining installation and/or holiday testing shall cease whenever the superintendent is not on-site.

1.03 Storage, Handling and Protection

Care shall be taken in shipping, handling and storage to avoid damaging the lining materials. Any lining product damaged in shipment, showing deterioration, or which has been exposed to any other adverse storage condition that may have caused damage, even though no such damage is evident, shall be marked as rejected and removed at once form the job site. While stored, the lining products shall be adequately packaged, protected and stored in accordance with the manufacturer's recommendations.

1.04 Submittals

A. The Contractor shall submit product data for all products to be installed under this section of the Specifications.

B. The Contractor shall submit evidence of meeting the requirements of Article 1.02 above.

C. The Contractor shall submit complete shop drawings of the manhole lining system(s) to demonstrate compliance with these Specifications, materials and detailed installation procedures. Testing procedures and quality control procedures shall also be submitted. Certifications that the lining system was manufactured in accordance with these Specifications and the applicable ASTM standards shall be submitted with each material shipment.

D. Results of the spark tests conducted on lined manholes will be logged in duplicate and a copy of this log submitted to the Engineer. The log shall contain at a minimum the date of the spark test, manhole ID spark tested, pass/fail status, number of discontinuities in the coating film, corrective action taken for discontinuities in the coating film, and signed off by the Owner or Engineer present during the spark testing.

E. The Contractor shall submit product data for the equipment systems used to perform spark testing including the voltage setting recommended by the epoxy resin-based lining system manufacturer. A written certification from the lining system manufacturer certifying the testing equipment's compatibility with the lining system and recommended voltage setting shall be provided upon the Engineer's request.

Part 2 Products

2.01 Epoxy Resin-Based Linings

A. Epoxy resin-based liners shall be 100% solids by volume, volatile organic compound (VOC) free and shall conform to the minimum physical properties listed in the following table:

Compressive Strength	ASTM D695	10,500 psi
Tensile Strength	ASTM D638	7,000 psi
Flexural Strength	ASTM D790	12,000 psi
Flexural Modulus (Initial)	ASTM D790	730,000 psi
Density		87 ± pcf
Bond		Exceed tensile strength of substrate

B. The structures lined with epoxy resin-based liners shall be resistant to corrosion caused by:

1. Hydrogen Sulfide

2. 20% Sulfuric Acid

3. 17% Nitric Acid

4. 5% Sodium Hydroxide

5. All common ingredients normally associated with sanitary sewer environments

C. The finished liner shall have long-term (50-year) flexural modulus of elasticity value of 500,000 psi and shall be certified by independent third-party testing.

D. Epoxy resin-based linings shall be compatible with existing thermal conditions in the manhole.

E. The final product shall not deteriorate, corrode, or lose structural strength in any manner.

F. The system shall be designed to operate at ambient temperatures up to 140 degrees F with excellent abrasion resistance.

G. Chemical sealants or grouts used to seal active manhole leaks, patch holes or cracks, fill voids and to otherwise prepare the manhole surface for lining shall be suitable for wastewater system service and chemically resistant to any chemicals or vapors normally associated with domestic wastewater installations.

2.02 Level C Lining System

A. The Level C lining system shall be an epoxy resin-based lining system applied with a minimum finished thickness, exclusive of any required substrate preparation to enhance structural integrity and/or adhesion of the liner to the substrate as recommended by the lining system manufacturer, of 250 mil (1/4-inch) and shall be one of the following products:

1. Spraywall or Sprayshield as manufactured by Sprayroq, Inc.

2. S-301 Epoxy Spray System as manufactured by Warren Environmental, Inc.

3. SpectraShield Liner Systems as manufactured by Spectra Tech

4. Ecodur 201 by Castagra

Part 3 Execution

3.01 General

A. The Contractor shall notify all property owners who discharge sewage directly into the manhole being rehabilitated at least 48 hours in advance, giving the date, starting and estimated completion time for the work being conducted and any anticipated impact to the property owner. Notification shall consist of a door hanger and/or letter. A sample of the proposed door hanger or letter shall be submitted to

the Engineer for review and approval.

B. The Contractor shall bypass pump sewage flows around the manhole being rehabilitated while the work is being performed. A detailed bypass plan shall be submitted to the Engineer for approval before any work shall take place. The use of flow through plugs shall be permitted upon written approval by the Engineer.

C. Covers or plugs shall be placed over all pipe openings to prevent excess material from entering the wastewater collection system.

D. Manhole walls and benches shall be monolithically coated to the required thickness by spray-on methods in a single pass or application. Sprayed cementitious linings shall be trowelled smooth after application.

E. All invert channels shall be coated with grout or cementitious mortar as required to fill all cracks, voids, holes, etc. and to form a smooth flow channel. The entire channel shall be coated with the channel coating being a minimum ¼-inch thick. The invert channel shall be top coated with the epoxy resin based lining product to form a structurally sound, monolithic liner inside the entire structure.

F. A complete watertight seal shall be provided at the pipe and manhole wall connections. The Contractor shall submit details of how watertight connections shall be made to the Engineer for approval prior to performing any work.

G. Manhole lining shall not be installed until all required mainline sewer rehabilitation and/or other manhole work is completed.

H. Application of the spray applied material must be completed in one mobilization in order to minimize the disruption and cost of bypass pumping, pipeline plugging, traffic control and other ancillary services.

I. The finished manhole may be returned to service immediately upon completion of the spray application.

J. Appropriate personal protection equipment shall be used with supplied air being utilized to the spray technician and other personnel in direct contact with the spray environment.

K. The spray shall be applied so that the entire structure receives a structurally sound, monolithic liner. The finished invert surfaces shall be smooth, free of ridges and bumps and will be sloped in the direction of flow. Special care shall be taken to ensure a smooth transition between the new manhole invert and intersecting pipeline inverts so that flow will not be impaired.

L. The cured surfacing thickness shall be smooth, even (without ridges or bumps) and continuous with proper sealing connections to any non-rehabilitated areas.

M. The monolithic lining shall completely cover the interior of the existing manhole including the benches and invert unless otherwise directed by the Engineer. The lining shall effectively seal the interior surfaces of the manhole and prevent any

penetration or leakage of ground water infiltration.

3.02 Surface Preparation (All Levels)

A. The Contractor shall clean each sewer manhole to be restored and shall dispose of any debris or resulting material in a manner and place suitable to the Owner. Cleaning shall be performed using a high-pressure jet wash at a minimum of 3,500 psi water pressure to remove all dust, biological growths, grease, oils or any other surface contaminants or coatings.

B. The Contractor shall immediately notify the Engineer of any coatings that cannot be removed or substrates which cannot be cleaned and, upon the approval of the Engineer, may use a blast abrasive in these area(s) to rough up the surface sufficient to obtain and ensure adequate bonding of the liner. Roots shall be removed by manually cutting them from inside the manhole.

C. The Contractor shall conduct a visual inspection of each manhole after it is cleaned. All active leaks shall be plugged or sealed with an appropriate grout compatible with the lining. Injection grouting may be required to seal active leaks including existing leaks in invert channels and benches. All loose mortar and rubble of existing benches, walls and inverts shall be removed.

D. The Contractor shall prepare the manhole to receive lining as necessary by reshaping and repairing benches, inverts and walls where required including smoothing out irregular shaped corbel and chimney sections prior to any spray application. All interior surfaces shall be prepared as recommended by the lining system manufacturer. Minimum requirements of the Specification are as follows:

1. All cracks and voids must be repaired and filled with suitable non-shrinking cements, sealants or grouts, including all voids between existing sewer pipes and manhole walls. All patch repairs shall be smooth and even with the manhole wall.

2. All voids around existing manhole rungs, steps and anchors shall be filled.

3. All surfaces shall be suitably prepared for the required bonding of the liner as recommended by the manufacturer and acceptable to the Engineer.

E. Prior to lining, the Engineer shall inspect and approve the surface preparation work. The Contractor shall notify the Engineer when the manholes are ready for inspection. The manhole lining shall be performed immediately after the Engineer's inspection or the manhole may need to be re-cleaned prior to lining application to remove accumulated debris on walls and benches.

3.03 Additional Requirements for Resin-Based Manhole Lining (Level C)

A. Application of the liner shall not be made unless the ambient temperature inside the structure is 50 degrees F or higher and expected to be the same or rise during the

next 72 hours.

B. The liner shall be manually sprayed to all surfaces by a factory-certified, trained technician experienced in the application of a spray applied resin.

C. No other products such as grouts, cements or sealants may be considered as part of the structural restoration. However, said products may be used as part of the repair and surface preparation process as specified in Section 3.02 of this Specification.

D. The wall of the Level "C" liner shall be structurally designed to withstand the hydraulic load generated by the groundwater table and to restore structural integrity.

3.04 Acceptance Testing

A. Field Acceptance

1. Field acceptance of manhole lining shall be based on the Engineer's field inspection and evaluation of the appropriate installation and curing test data. The lining shall provide a continuous monolithic surfacing with uniform thickness throughout the manhole interior. If the thickness is not uniform or is less than specified, it shall be repaired or replaced at no additional cost to the Owner.

2. If the Engineer has to enter the manhole to inspect the work, the Contractor shall provide forced air ventilation, gas monitors, harnesses, lights, confined space entry, etc. for the Engineer to enter the manhole and perform the inspection in strict and complete accordance with OSHA requirements at no additional cost to the Owner.

B. Spark Arrestor (Holiday) Testing, Level C Epoxy Resin-Based Manholes Only

1. All epoxy resin-based manhole linings shall be spark tested prior to being placed in service. Spark testing shall be required of the entire surface area of the manhole (field and joint) and shall be conducted in accordance with the liner system manufacturer's recommendations.

2. Equipment systems used to perform spark testing shall be compatible with the materials to be tested. Spark testing equipment shall provide a visual as well as audible indicator to identify pinholes or splits in the liner system.

3. Spark testing shall not occur without the Owner or Engineer present during testing unless prior approval is given in writing by the Engineer.

C. Finished Lining Systems

1. There shall be no groundwater infiltration or other leakage (active or previously active) through the manhole walls, benches, inverts or pipe connections at the manhole after it has been lined.

2. If leakage is detected, it shall be eliminated with an appropriate, grout or sealant as recommended by the manufacturer, over coated with epoxy or approved level C lining material and approved by the Engineer at no additional cost to the Owner. Injection grouting may be required to stop leaks around or in invert channels, pipe connections and benches.

3. The Engineer's decision regarding acceptable repair methods for defective linings shall be final. If any lining is found to be defective after it has been installed or during the warranty period, it shall be repaired or replaced in a manner satisfactory to the Engineer and at no additional cost to the Owner.

END OF SECTION

Part 1 General

1.01 Scope

A. The work covered by this section includes furnishing all labor, materials and equipment required to bore and jack casings and to properly complete pipeline construction as described herein and/or shown on the Drawings.

B. Supply all materials and perform all work in accordance with applicable American Society for Testing and Materials (ASTM), American Water Works Association (AWWA), American National Standards Institute (ANSI) or other recognized standards. Latest revisions of all standards are applicable. If requested by the Engineer, submit evidence that manufacturer has consistently produced products of satisfactory quality and performance over a period of at least two years.

1.02 Submittals

A. Submit shop drawings, product data and experience in accordance with the requirements of the City of Portland.

B. Material Submittals: The Contractor shall provide shop drawings and other pertinent specifications and product data as follows:

1. Shop drawings for casing pipe showing sizes and connection details.

2. Design mixes for concrete and grout.

3. Casing Spacers.

C. Experience Submittals

1. Boring and jacking casings is deemed to be specialty contractor work. If the Contractor elects to perform the work, the Contractor shall provide evidence as required by the General Conditions. A minimum of five continuous years of experience in steel casing construction is required of the casing installer. Evidence of this experience must be provided with the shop drawings for review by the Engineer.

2. The filling of the void between the casing wall and carrier pipe is deemed to be specialty contractor work. If the Contractor elects to perform this work, the Contractor shall provide evidence of this experience for review by the Engineer.

1.03 Storage and Protection

All materials shall be stored and protected in accordance with the manufacturer's recommendations and as approved by the Engineer.

Part 2 Products

2.01 Materials and Construction

A. Casing

1. The casing shall be new and unused pipe. The casing shall be made from steel plate having a minimum yield strength of 35,000 psi. The steel plate shall also meet the chemical requirements of one of the following: ASTM A36; ASTM A139, Grade B, C, D or E; ASTM A53, Type S or Type E, Grade A or B.

2. The thicknesses of casing shown in Paragraph B. below are minimum thicknesses. Actual thicknesses shall be determined by the casing installer, based on an evaluation of the required forces to be exerted on the casing when jacking. Any buckling of the casing due to jacking forces shall be repaired at no additional cost to the Owner.

3. The diameters of casing shown in Paragraph B. below and shown on the Drawings are minimum. Larger casings, with the Engineer's approval, may be provided at no additional cost to the Owner, for whatever reasons the Contractor may decide, whether casing size availability, line and grade tolerances, soil conditions, etc.

B. Casing Sizes

UNDER RAILROADS		
Pipe Diameter, inches	Casing Diameter, inches	Wall Thickness, inches
6	14	0.282
8	18	0.313
10	20	0.344
12	22	0.375
14	24	0.407
16	30	0.469
18	30	0.469
20	32	0.501
24	36	0.532
30	42	0.563
36	48	0.688

UNDER HIGHWAYS		
Pipe Diameter, inches	Casing Diameter, inches	Wall Thickness, inches
6	12	0.250
8	16	0.250
10	16	0.250
12	18	0.250
14	22	0.250
16	24	0.250
18	30	0.312
20	30	0.312
24	36	0.375
30	42	0.375
36	48	0.500

C. Casing Spacers: Casing spacers shall meet one of the following requirements:

1. Casing spacers shall be flanged, bolt-on style with a two-section stainless steel shell lined with a PVC liner, minimum 0.09-inch thick also having a hardness of 85-90 durometer. Runners shall be attached to stainless steel risers which shall be properly welded to the shell. The height of the runners and risers shall be manufactured such that the pipe does not float within the casing.

2. Casing spacers shall be a two-section, flanged, bolt on style constructed of heat fused PVC coated steel, minimum 14 gauge band and 10 gauge risers, with 2-inch wide glass reinforced polyester insulating skids, heavy duty PVC inner liner, minimum 0.09-inch thick having a hardness of 85-90 durometer, and all stainless steel or cadmium plated hardware.

3. Casing spacers shall be equal to Cascade Waterworks Manufacturing Company, Pipeline Seal and Insulator, Inc., or Advance Products and Systems, Inc.

D. Grout: Grout may be used for filling the void between the casing pipe and the carrier pipe. Cement shall conform to ASTM C 150, Type I or Type II. Grout shall have a minimum compressive strength of 100 psi attained within 24 hours.

E. Carrier Pipe: Carrier pipes shall meet requirements as specified in Section 33 10 00,

33 30 00, and 33 30 10 of these Specifications.

F. Surface Settlement Markers: Surface settlement markers within pavement areas shall be P.K. nails. Surface settlement markers within non-paved areas shall be wooden hubs.

G. End Seals: End seals shall be made of synthetic rubber, conical shape, pull-on or wrap around style with stainless steel bands for securing to the carrier pipe and the casing. End seals shall be a minimum thickness of 1/8-inch.

2.02 Equipment

A. A cutting head shall be attached to a continuous auger mounted inside the casing pipe.

B. On casing pipe for gravity sewer over 60 feet in length, the installation equipment shall include a steering head and a grade indicator.

C. The steering head shall be controlled manually from the bore pit. The grade indicator shall consist of a water level attached to the casing which would indicate the elevation of the front end of the casing or some other means for grade indication approved by the Engineer.

Part 3 Execution

3.01 General

A. Interpretation of soil investigation reports and data, investigating the site and determination of the site soil conditions prior to bidding is the sole responsibility of the Contractor. Any subsurface investigation by the Bidder or Contractor must be approved by the appropriate authority having jurisdiction over the site. Rock and/or water, if encountered, shall not entitle the Contractor to additional compensation.

B. Casing construction shall be performed so as not to interfere with, interrupt or endanger roadway surface and activity thereon, and minimize subsidence of the surface, structures, and utilities above and in the vicinity of the casing. Support the ground continuously in a manner that will prevent loss of ground and keep the perimeters and face of the casing, passages and shafts stable. The Contractor shall be responsible for all settlement resulting from casing operations and shall repair and restore damaged property to its original or better condition at no cost to the Owner.

C. Face Protection: The face of the excavation shall be protected from the collapse of the soil into the casing.

D. Casing Design: Design of the bore pit and required bearing to resist jacking forces are the responsibility of the Contractor. The excavation method selected shall be compatible with expected ground conditions. The lengths of the casing shown on the Drawings are the minimum lengths required. The length of the casing may be extended for the convenience of the Contractor, at no additional cost to the Owner.

Due to restrictive right-of-way and construction easements, boring and jacking casing lengths less than the nominal 20 foot length may be necessary.

E. Highway Crossings

1. The Contractor shall be held responsible and accountable for the coordinating and scheduling of all construction work within the highway right-of-way.

2. Work along or across the highway department rights-of-way shall be subject to inspection by such highway department.

3. All installations shall be performed to leave free flows in drainage ditches, pipes, culverts or other surface drainage facilities of the highway, street or its connections.

4. No excavated material or equipment shall be placed on the pavement or shoulders of the roadway without the express approval of the highway department.

5. In no instance will the Contractor be permitted to leave equipment (trucks, backhoes, etc.) on the pavement or shoulder overnight. Construction materials to be installed, which are placed on the right-of-way in advance of construction, shall be placed in such a manner as not to interfere with the safe operation of the roadway.

6. The Contractor shall be responsible for providing the Owner sufficient information to obtain a blasting permit in a timely manner.

F. Railroad Crossings

1. The Contractor shall secure permission from the Railroad to schedule work so as not to interfere with the operation of the Railroad.

2. Additional insurance is required for each railroad crossing. The Contractor shall furnish the Railroad with such additional insurance as may be needed, cost of the same shall be borne by the Contractor.

3. All work on the Railroad right-of-way, including necessary support of tracks, safety of operations and other standard and incidental operation procedures may be under the supervision of the appropriate authorized representative of the Railroad affected and any decisions of this representative pertaining to construction and/or operations shall be final and construction must be governed by such decisions.

4. If, in the opinion of the Railroad, it becomes necessary to provide flagging protection, watchmen or the performance of any other work in order to keep the tracks safe for traffic, the Contractor shall coordinate such work and shall reimburse the Railroad, in cash, for such services, in accordance with accounting procedures agreed on by the Contractor and affected Railroad

before construction is started.

5. No blasting shall be permitted within the Railroad right-of-way.

3.02 Groundwater Control

A. The Contractor shall control the groundwater throughout the construction of the casing.

B. Methods of dewatering shall be at the option and responsibility of the Contractor. Maintain close observation to detect settlement or displacement of surface facilities due to dewatering. Should settlement or displacement be detected, notify the Engineer immediately and take such action as necessary to maintain safe conditions and prevent damage.

C. When water is encountered, provide and maintain a dewatering system of sufficient capacity to remove water on a 24 hour basis keeping excavations free of water until the backfill operation is in progress. Dewatering shall be performed in such a manner that removal of soil particles is held to a minimum. Dewater into a sediment trap and comply with requirements specified in Section 02125 of these Specifications.

3.03 Safety

A. Provide all necessary bracing, bulkheads and shields to ensure complete safety to all traffic, persons and property at all times during the work. Perform the work in such a manner as to not permanently damage the roadbed or interfere with normal traffic over it.

B. Observe all applicable requirements of the regulations of the authorities having jurisdiction over this site. Conduct the operations in such a manner that all work will be performed below the level of the roadbed.

C. Perform all activities in accordance with the Occupational Safety and Health Act of 1970 (PL-596), as amended, applicable regulations of the Federal Government, OSHA 29CFR 1926 and applicable criteria of ANSI A10.16-81, “Safety Requirements for Construction of Tunnel Shafts and Caissons”.

3.04 Surface Settlement Monitoring

A. Provide surface settlement markers, placed as specified and as directed by the Engineer. The Contractor shall place settlement markers outside of pavement area, along the centerline of the casing at 20 foot intervals and offset 10 feet each way from the centerline of the tunnel. Markers shall also be placed at each shoulder of the roadway, at each edge of pavement, at the centerline of the pavement and at 10 and 25 feet in each direction from the centerline of the casing. Tie settlement markers to bench marks and indices sufficiently removed as not to be affected by the casing operations.

B. Make observations of surface settlement markers, placed as required herein, at

regular time intervals acceptable to the Engineer. In the event settlement or heave on any marker exceeds 1-inch, the Contractor shall immediately cease work and using a method approved by the Engineer and the authority having jurisdiction over the project site, take immediate action to restore surface elevations to that existing prior to start of casing operations.

C. Take readings and permanently record surface elevations prior to start of dewatering operations and/or shaft excavation. The following schedule shall be used for obtaining and recording elevation readings: all settlement markers, once a week; all settlement markers within 50 feet of the casing heading, at the beginning of each day; more frequently at the Engineer's direction if settlement is identified. Make all elevation measurements to the nearest 0.01 foot.

D. The Contractor shall cooperate fully with jurisdictional personnel. Any settlement shall be corrected by, and at the expense of, the Contractor.

E. Promptly report any settlement and horizontal movement immediately to the Engineer and take immediate remedial action.

3.05 Boring and Jacking

A. Shaft

1. Conduct boring and jacking operations from a shaft excavated at one end of the section to be bored. Where conditions and accessibility are suitable, place the shaft on the downstream end of the bore.

2. The shaft shall be rectangular and excavated to a width and length required for ample working space. If necessary, sheet and shore shaft properly on all sides. Shaft sheeting shall be timber or steel piling of ample strength to safely withstand all structural loadings of whatever nature due to site and soil conditions. Keep preparations dry during all operations. Perform pumping operations as necessary.

3. The bottom of the shaft shall be firm and unyielding to form an adequate foundation upon which to work. In the event the shaft bottom is not stable, excavate to such additional depth as required and place a gravel sub-base or a concrete sub-base if directed by the Engineer due to soil conditions.

B. Jacking Rails and Frame

1. Set jacking rails to proper line and grade within the shaft. Secure rails in place to prevent settlement or movement during operations. The jacking rails shall cradle and hold the casing pipe on true line and grade during the progress of installing the casing.

2. Place backing between the heels of jacking rails and the rear of the shaft. The backing shall be adequate to withstand all jacking forces and loads.

3. The jacking frame shall be of adequate design for the magnitude of the job. Apply thrust to the end of the pipe in such a manner to impart a uniformly balanced load to the pipe barrel without damaging the joint ends of the pipe.

C. Boring and jacking of casing pipes shall be accomplished by the dry auger boring method without jetting, sluicing or wetboring.

D. Auger the hole and jack the casing through the soil simultaneously.

E. Bored installations shall have a bored-hole diameter essentially the same as the outside diameter of the casing pipe to be installed.

F. Execute boring ahead of the casing pipe with extreme care, commensurate with the rate of casing pipe penetration. Boring may proceed slightly in advance of the penetrating pipe and shall be made in such a manner to prevent any voids in the earth around the outside perimeter of the pipe. Make all investigations and determine if the soil conditions are such as to require the use of a shield.

G. As the casing is installed, check the horizontal and vertical alignment frequently. Make corrections prior to continuing operation. For casing pipe installations over 100 feet in length, the auger shall be removed and the alignment and grade checked at minimum intervals of 60 feet.

H. Any casing pipe damaged in jacking operations shall be repaired, if approved by the Engineer, or removed and replaced at Contractor's own expense.

I. Lengths of casing pipe, as long as practical, shall be used except as restricted otherwise. Joints between casing pipe sections shall be butt joints with complete joint penetration, single groove welds, for the entire joint circumference, in accordance with AWS recommended procedures. Prior to welding the joints, the Contractor shall ensure that both ends of the casing sections being welded are square.

J. The Contractor shall prepare a contingency plan which will allow the use of a casing lubricant, such as bentonite, in the event excessive frictional forces jeopardize the successful completion of the casing installation.

K. Once the jacking procedure has begun, it should be continued without stopping until completed, subject to weather and conditions beyond the control of the Contractor.

L. Care shall be taken to ensure that casing pipe installed by boring and jacking method will be at the proper alignment and grade.

M. The Contractor shall maintain and operate pumps and other necessary drainage system equipment to keep work dewatered at all times.

N. Adequate sheeting, shoring and bracing for embankments, operating pits and other appurtenances shall be placed and maintained to ensure that work proceeds safely and expeditiously. Upon completion of the required work, the sheeting, shoring and bracing shall be left in place, cut off or removed, as designated by the Engineer.

O. Trench excavation, all classes and type of excavation, the removal of rock, muck, debris, the excavation of all working pits and backfill requirements of Section 31 23 33 are included under this section.

P. All surplus material shall be removed from the right-of-way and the excavation finished flush with the surrounding ground.

Q. Grout backfill shall be used for unused holes or abandoned pipes.

R. Any replacement of carrier pipe in an existing casing shall be considered a new installation, subject to the applicable requirements of these Specifications.

3.06 Ventilation and Air Quality

Provide, operate and maintain for the duration of casing project a ventilation system to meet safety and OSHA requirements.

3.07 Rock Excavation

A. In the event that rock is encountered during the installation of the casing pipe which, in the opinion of the Engineer, cannot be removed through the casing, the Engineer may authorize the Contractor to complete the crossing by a method established in a change order.

B. At the Contractor's option, the Contractor may continue to install the casing and remove the rock through the casing at no additional cost to the Owner.

3.08 Installation of Pipe

A. After construction of the casing is complete, and has been accepted by the Engineer, install the pipeline in accordance with the Drawings and Specifications.

B. Check the alignment and grade of the casing and prepare a plan to set the pipe at proper alignment, grade and elevation, without any sags or high spots.

C. The pipe shall be supported within the casing by use of casing spacers sized to limit radial movement to a maximum of 1-inch. Provide a minimum of two casing spacers per nominal length of pipe. Casing spacers shall be attached to the pipe at maximum 18 to 20 foot intervals

D. Close the ends of the casing with 4-inch brick walls or approved end seal.

3.09 Sheeting Removal

Remove sheeting used for shoring from the shaft and off the job site. The removal of sheeting, shoring and bracing shall be done in such a manner as not to endanger or damage either new or existing structures, private or public properties and also to avoid cave-ins or sliding in the banks.

3.10 Interstate Restoration

When boring and jacking operations encroach upon the right-of-ways of the federal interstate system, the Contractor shall restore all screening trees with seedlings of like species.

END OF SECTION

Part 1 General

1.01 Scope

A. This Section describes products to be incorporated into the water mains and requirements for the installation and use of these items. Furnish all products and perform all labor necessary to fulfill the requirements of these Specifications.

B. Supply all products and perform all work in accordance with applicable American Society for Testing and Material (ASTM), American Water Works Association (AWWA), American National Standards Institute (ANSI), or other recognized standards. Latest revisions of all standards are applicable.

1.02 Qualifications

If requested by the Engineer, submit evidence that manufacturers have consistently produced products of satisfactory quality and performance for a period of at least two years.

1.03 Submittals

Complete shop drawings and engineering data for all products shall be submitted to the Engineer a minimum of five working days prior to the pre-construction conference. A minimum of six full sets of manufacturer's data calling out make, model numbers, sizes, and intended applications for the materials shall be delivered to the City of Portland for approval. An approved set of submittals will be returned to the Contractor and developer, if requested, at or prior to the pre-construction conference.

1.04 Transportation and Handling

A. Unloading: Furnish equipment and facilities for unloading, handling, distributing and storing pipe, fittings, valves and accessories. Make equipment available at all times for use in unloading. Do not drop or dump materials. Any materials dropped or dumped will be subject to rejection without additional justification. Pipe handled on skids shall not be rolled or skidded against the pipe on the ground.

B. Handling: Handle pipe, fittings, valves and accessories carefully to prevent shock or damage. Handle pipe by rolling on skids, forklift, or front end loader. Do not use material damaged in handling. Slings, hooks or pipe tongs shall be padded and used in such a manner as to prevent damage to the exterior coatings or internal lining of the pipe.

1.05 Storage and Protection

A. Store all pipe which cannot be distributed along the route. Make arrangements for the use of suitable storage areas.

B. Stored materials shall be kept safe from damage. The interior of all pipe, fittings and other appurtenances shall be kept free from dirt or foreign matter at all times. Valves and hydrants shall be drained and stored in a manner that will protect them from damage by freezing.

C. Pipe shall not be stacked higher than the limits recommended by the manufacturer. The bottom tier shall be kept off the ground on timbers, rails or concrete. Pipe in tiers shall be alternated: bell, plain end; bell, plain end. At least two rows of timbers shall be placed between tiers and chocks, affixed to each other in order to prevent movement. The timbers shall be large enough to prevent contact between the pipe in adjacent tiers.

D. Stored mechanical and push-on joint gaskets shall be placed in a cool location out of direct sunlight. Gaskets shall not come in contact with petroleum products. Gaskets shall be used on a first-in, first-out basis.

E. Mechanical-joint bolts shall be handled and stored in such a manner that will ensure proper use with respect to types and sizes.

1.06 Quality Assurance

A. Product manufacturers shall provide the Engineer with written certification that all products furnished comply with all applicable provisions of these Specifications.

B. If ordered by the Engineer, each pipe manufacturer shall furnish the services of a competent factory representative to supervise and/or inspect the installation of pipe. This service will be furnished for a minimum of five days during initial pipe installation

Part 2 Products

2.01 Piping Materials and Accessories

A. Ductile Iron Pipe (DIP)

1. Ductile iron pipe shall be manufactured in accordance with AWWA C151. All pipe, except specials, shall be furnished in nominal lengths of 18 to 20 feet. Sizes will be as shown on the Drawings. All pipe shall have a minimum pressure rating as indicated in the following table, and corresponding minimum wall thickness, unless otherwise specified or shown on the Drawings:

Pipe Sizes (inches)	Pressure Class (psi)
4 - 12	350
16 - 24	250

2. Pipe and fittings shall be cement lined in accordance with AWWA C104. Pipe and fittings shall be furnished with a bituminous outside coating.

3. Fittings shall be ductile iron mechanical joint and shall conform to AWWA C110 or AWWA C153 with a minimum rated working pressure of 250 psi.

4. Joints

   a. Unless shown or specified otherwise, joints shall be push-on or restrained joint type for pipe and standard mechanical or restrained joints for fittings. Push-on and mechanical joints shall conform to AWWA C111. Restrained joints shall be American “LOK-FAST”, “FLEX-RING” or “LOK-RING”, Clow “SUPER-LOCK”, or U.S. Pipe “TR FLEX” or “LOK-TYTE”. No field welding of restrained joint pipe will be permitted.

   b. Flanged joints shall meet the requirements of ANSI B16.1, Class 250.

5. Flexible, restrained joint pipe shall be minimum Class 250. Joints shall be ball and socket type providing restraint and leaktight connections for up to 15 degrees of joint deflection. Flexible, restrained joint pipe shall be equal to American “FLEX-LOK”, U.S. Pipe “USIFLEX”, or Clow F-141. Appropriate transition pieces shall be utilized on each end of run of flexible joint pipe. All joint material required for proper installation shall be furnished by the pipe manufacturer.

6. Bolts and Nuts

   a. Provide the necessary bolts for connections. All bolts and nuts shall be threaded in accordance with ANSI B1.1, Coarse Thread Series, Class 2A external and 2B internal fit. All bolts and nuts shall be made in the U.S.A.

   b. Bolts and nuts for mechanical joints shall be Tee Head Bolts and nuts of high strength low-alloy steel in accordance with ASTM A 242 to the dimensions shown in AWWA C111/ANSI A21.11.

   c. Flanged joints shall be bolted with through stud or tap bolts of required size as directed. Bolt length and diameter shall conform to ANSI/AWWA C115 for Class 125 flanges shown in ANSI/ASME B16.1.

   d. Bolts for exposed service shall be zinc plated, cold pressed, steel machine bolts conforming to ASTM A 307, Grade B. Nuts for exposed service shall be zinc plated, heavy hex conforming to ASTM A 563. Zinc plating shall conform to ASTM B 633, Type II.

   e. Bolts for submerged service shall be stainless steel machine bolts conforming to ASTM A 193, Grade B8. Nuts shall be heavy hex, stainless steel conforming to ASTM A 194, Grade 8.

7. Provide the appropriate gaskets for mechanical and flange joints. Gaskets for flange joints shall be made of 1/8-inch thick, cloth reinforced rubber; gaskets may be ring type or full face type.

8. Mechanical joint glands shall be ductile iron.

9. Thrust collars shall be welded-on ductile iron body type designed to withstand thrust due to 250 psi internal pressure on a dead end.

10. Acceptance will be on the basis of the Engineer's inspection and the manufacturer's written certification that the pipe was manufactured and tested in accordance with the applicable standards.

B. Polyvinyl Chloride Pipe (PVC)

1. SDR Pipe

a. Unless shown or specified otherwise, all PVC pipe shall have belled ends for push-on type jointing and shall conform to ASTM D 2241. The pipe shall have a Standard Dimension Ratio (SDR) of 21 and shall be capable of withstanding a working pressure of 200 psi. Pipe shall be supplied in minimum lengths of 20 feet.

b. All fittings shall be of the same material, strength, and dimension as the pipe. Special adapters shall be provided as recommended by the manufacturer to adapt the PVC pipe to mechanical jointing with cast or ductile iron pipe, fittings, or valves.

2. C900 Pipe

a. Where shown on the Drawings, PVC pipe shall have belled ends for push-on type jointing and shall conform to AWWA C900, ductile iron pipe equivalent outside diameters. The pipe shall have a Dimension Ratio (DR) of 14 and shall be capable of withstanding a working pressure of 200 psi. Pipe shall be supplied in minimum lengths of 20 feet.

b. All fittings shall be of cast or ductile iron meeting the requirements of AWWA C110 or AWWA C153 with a minimum rated working pressure of 250 psi. Fittings shall be cement lined in accordance with AWWA C104. Fittings shall be furnished with a bituminous outside coating. Special adapters shall be provided, as recommended by the manufacturer, to adapt the PVC pipe to mechanical jointing with cast or ductile iron pipe, fittings or valves.

3. All PVC pipe installed for water distribution shall be blue in color.

C. Copper Pipe

1. Pipe shall be hard drawn copper tubing, ASTM B 88, Type K. Fittings shall be sweat type wrought copper, ANSI B16.22.

2. Where required, sweat to screw adapters shall be cast bronze ANSI B16.18, wrought solder joint ANSI B16.22. Unions shall be cast bronze or bronze with solder connections. Joints shall be made with 95/5 solder for Type K pipe.

D. Detection Wire: Detection wire shall be 12 gauge THHN (Thermo High Heat Nylon) copper locator wire and shall be provided over all PVC pipe.

E. Detection Tape: Detection tape shall be composed of a solid aluminum foil encased in a protective plastic jacket. Tapes shall be color coded in accordance with APWA color codes with the following legends: Water Systems, Safety Precaution Blue, “Caution Water Line Buried Below”. Colors may be solid or striped. Tape shall be permanently printed with no surface printing allowed. Tape width shall be a minimum of 2-inches when buried less than 10-inches below the surface. Tape width shall be a minimum of 3-inches when buried greater than 10-inches and less than 20-inches. Detection tape shall be equal to Lineguard Type III Detectable or Allen Systems Detectatape.

F. Acceptance will be on the basis of the Engineer's inspection and the manufacturer's written certification that the pipe was manufactured and tested in accordance with the applicable standards, including the National Sanitation Foundation. Additionally, each piece of pipe shall be stamped “NSF Approved”.

2.02 Valves

A. Gate Valves (GV)

1. 3-Inches in Diameter and Smaller: Gate valves shall be bronze, heavy duty, non-rising stem, and resilient wedge type. Valve ends shall be threaded. Valves shall have a minimum 200 psi working pressure for water (125 psi working pressure for steam). Valves shall be made in the U.S.A. Gate valves shall be equal to Crane No. 428.

2. 4-Inches through 12-Inches in Diameter: Gate valves 4-inches through 12-inches shall be resilient wedge type conforming to the requirements of AWWA C509 rated for 200 psi working pressure.

   a. Valves shall be provided with two O-ring stem seals with one O-ring located above and one O-ring below the stem collar. The area between the O-rings shall be filled with lubricant to provide lubrication to the thrust collar bearing surfaces each time the valve is operated. At least one anti-friction washer shall be utilized to further minimize operating torque. All seals between valve parts, such as body and bonnet, bonnet and bonnet cover, shall be flat gaskets or O-rings.

   b. The valve gate shall be made of cast iron having a vulcanized, synthetic rubber coating, or a seat ring attached to the disc with retaining screws. Sliding of the rubber on the seating surfaces to compress the rubber will not be allowed. The design shall be such that compression-set of the rubber shall not affect the ability of the valve to seal when pressure is applied to either side of the gate. The sealing mechanism shall provide zero leakage at the water working pressure when installed with the line flow in either direction.

   c. All internal ferrous surfaces shall be coated with epoxy to a minimum

thickness of 4 mils. The epoxy shall be non-toxic, impart no taste to the water and shall conform to AWWA C550, latest revision.

d. Gate valves 4 through 12-inches shall be manufactured by American Flow Control, Mueller or M & H Valve.

3. 16-Inches in Diameter and Larger: Valves shall be double-disc type conforming to the requirements of AWWA C500. Valves shall be designed for horizontal installation with tracks and rollers, bypass valves, and bevel gear type operator. Valves shall be rated for 250 psi working pressure.

a. Valve ends shall be mechanical joint type except where flanged or restrained joint ends are shown. Flanged joints shall meet the requirements of ANSI B16.1, Class 250.

b. Buried valves shall be equipped with valve boxes unless access to the operator is provided by a manhole.

c. Manually operated valves, including geared valves, shall be non-rising stem type having O-ring seals.

d. Gate valves 16-inches in diameter and larger shall be manufactured by American Flow Control, Mueller or M & H Valve.

B. Butterfly Valves (BV)

1. Butterfly valves shall be resilient seated, short body design, and shall be designed, manufactured, and tested in accordance with all requirements of AWWA C504 for Class 150B.

2. Valve bodies shall be ductile iron conforming to ASTM A 536, Grade 65-45-12 or ASTM A 126, Grade B cast iron. Shafts shall be ASTM A 276, Type 304 stainless steel, machined and polished. Valve discs shall be ductile iron, ASTM A 536, Grade 65-45-12 or ASTM A 126, Grade B cast iron. The resilient valve seat shall be located either on the valve disc or in the valve body and shall be fully field adjustable and field replaceable.

3. Valves shall be installed with the valve shafts horizontal. Valves and actuators shall have seals on all shafts and gaskets on valve actuator covers to prevent the entry of water. Actuator mounting brackets shall be totally enclosed and shall have gasket seals.

4. Actuators

a. Valves shall be equipped with traveling nut, self-locking type actuators designed, manufactured and tested in accordance with AWWA C504. Actuators shall be capable of holding the disc in any position between full open and full closed without any movement or fluttering of the disc.

b. Actuators shall be furnished with fully adjustable mechanical stop-limiting

devices. Actuators that utilize the sides of the actuator housing to limit disc travel are unacceptable.

c. Valve actuators shall be capable of withstanding a minimum of 450 foot pounds of input torque in either the open or closed position without damage.

7. Operators: Valves for buried service shall have a nut type operator and shall be equipped with a valve box and stem extension, as required.

8. Valve ends shall be mechanical joint type, except where flanged or restrained joint ends are shown.

9. Butterfly valves shall be manufactured by Mueller, M & H Valve, DeZurik, Val-Matic, or Pratt.

C. Ball Valves (BLV-BZ)

1. Ball valves shall have a single piece, bronze body construction. Valves shall have threaded ends and lever operator. Balls shall be 316 stainless steel with TFE seats and packing. Valves shall be pressure rated for 400 psi at 68 degrees F.

2. Valves shall be Apollo Series 70-100, Neles-Jamesbury Series 300, Watts No. B-6400, or Nibco T580.

D. PVC Ball Valves (PBLV)

Ball valves shall be non-shock thermoplastic of Type 1, Grade 1 PVC with O-ring stem seal and Teflon ball seat. O-ring seals shall be EPDM. Valves shall withstand 150 psi pressure. Valves shall have union connections at each end. Valves shall be Hayward "Safe Block", or Chemtrol TU Series, or Spears (True Union 2000 Industrial).

2.03 Backflow Preventers

A. Provide reduced pressure backflow preventers where required by the City of Portland. Backflow preventers shall be installed such that is protected from freezing and allows for proper drainage and testing. Backflow preventers shall be rated for operation with inlet water pressures up to 175 psig and water temperatures up to 180 degrees F. Backflow preventers shall be tested and certified in accordance with ASSE 1015 and AWWA C506 and C510. Provide isolation valves on the inlet and outlet of each reduced pressure backflow preventer.

B. Acceptable Manufacturers: Watt, Wilkins, Zurn.

2.04 Fire Service Meter Assembly (4” to 8” Diameter)

A. Fire service meter assembly shall conform to the following:

1. All fire service meter assemblies shall conform to the requirements of ANSI/AWWA C703, current version.
2. Assembly components shall operate without leakage, damage or malfunction up to a maximum pressure of 175 psi.
3. Meter assembly shall be capable of metering a wide flow range and be equipped to measure both domestic and fire service water usage.

B. Measuring chambers shall consist of a measuring element, calibration device and register. The register shall be assembled to the measuring chamber in a tamperproof manner so removal can be made only after the measuring chamber is removed from the maincase. Sweephand reading and odometer wheel details shall conform to AWWA C701, current version.

C. The meter maincase shall be Water Works bronze with internal straightening vanes installed and retained firmly in the inlet portion of the maincase to maximize meter performance and accuracy.

D. Flanges for the required size meter assemblies shall be of the Class 125 round type, flat faced, and shall conform to ANSI 16.1 for specified diameter, drilling and thickness.

E. Each meter assembly shall include a separate FM (Factory Mutual) approved, UL (Underwriters' Laboratories) Listed external fire service strainer with a minimum net open area of at least four (4) times the pipe opening and be V-shaped stainless steel screen for the purpose of maintaining a full unobstructed flow pattern. Strainers shall have a coated ductile iron with steel fasteners capable of maintaining a static pressure of 350 psi.

F. Fire Service Meter Assemblies shall be Sensus Compact Fire Service (CFS) Meter Assembly or approved equal.

2.05 Fire Hydrants (FH)

A. All fire hydrants shall conform to the requirements of AWWA C502 for 150 psi working pressure. Hydrants shall be the compression type, closing with line pressure. The valve opening shall not be less than 4-1/2-inches.

B. In the event of a traffic accident, the hydrant barrel shall break away from the standpipe at a point above grade and in a manner which will prevent damage to the barrel and stem, preclude opening of the valve, and permit rapid and inexpensive restoration without digging or cutting off the water.

C. The means for attaching the barrel to the standpipe shall permit facing the hydrant a minimum of eight different directions.

D. Hydrants shall be fully bronze mounted with all working parts of bronze. Valve seat ring shall be bronze and shall screw into a bronze retainer.

E. All working parts, including the seat ring shall be removable through the top without

disturbing the barrel of the hydrant.

F. The operating nut shall match those on the existing hydrants. The operating threads shall be totally enclosed in an operating chamber, separated from the hydrant barrel by a rubber O-ring stem seal and lubricated by a grease or oil reservoir.

G. Hydrant shall be a non-freezing design and be provided with a simple, positive, and automatic drain which shall be fully closed whenever the main valve is opened.

H. Hose and pumper connections shall be breech-locked, pinned, or threaded and pinned to seal them into the hydrant barrel. Each hydrant shall have two 2-1/2-inch hose connections and one 4-1/2-inch pumper connection, all with National Standard threads and each equipped with cap and non-kinking chain.

I. Hydrants shall be furnished with a mechanical joint connection to the spigot of the 6-inch hydrant lead.

J. Minimum depth of bury shall be 40 inches. Provide extension section where necessary for proper vertical installation and in accordance with manufacturer's recommendations.

K. All outside surfaces of the barrel above grade shall be painted with enamel equal to Koppers Glamortex 501 in a color to be selected by the Owner.

L. Hydrants shall be traffic model and shall be Mueller Super Centurion or approved equal.

2.06 Valve Boxes (VB) and Extension Stems

A. All valves shall be equipped with valve boxes. The valve boxes shall be cast iron two-piece screw type with drop covers. Valve boxes shall have a 5.25-inch inside diameter. Valve box covers shall weigh a minimum of 13 pounds. The valve boxes shall be adjustable to 6-inches up or down from the nominal required cover over the pipe. Valve boxes shall be of sufficient length that bottom flange of the lower belled portion of the box is below the valve operating nut. Ductile or cast iron extensions shall be provided as necessary. Covers shall have “WATER VALVE” or “WATER” cast into them. Valve boxes shall be manufactured in the United States.

B. All valves shall be furnished with extension stems, as necessary, to bring the operating nut to within 30-inches of the top of the valve box. Connection to the valve shall be with a wrench nut coupling and a set screw to secure the coupling to the valve's operating nut. The coupling and square wrench nut shall be welded to the extension stem. Extension stems shall be equal to Mueller A-26441.

C. A concrete collar is to be installed to protect the valve box and shall measure 12” x 12” x 4” thick.

2.07 Air Valves for Water Service

A. Air Release Valves: The air release valve shall automatically release air accumulations from the pipeline due to the action of the float and lever mechanism. When the air valve body fills with air, the float falls. Through the leverage mechanism, this causes the resilient seat to open the orifice and allow the air to escape to the atmosphere. When all the air has been exhausted from the valve body, the float will be buoyed up. Through the leverage mechanism, this will cause the resilient seat to close the orifice, preventing water from being exhausted from the valve. Valve orifice size shall be as shown on the Drawings. The valve shall be ARI Model S-050 as manufactured by A.R.I. Flow Control Accessories

B. Air/Vacuum Valve: The air/vacuum valve shall discharge large amounts of air as the pipeline fills and allow air to enter the pipeline as it drains or in the event of vacuum conditions. The valve shall operate by means of a non-collapsible stainless steel float which seals an orifice. As air enters the valve the float shall drop from the orifice and allow the air to escape. As water rises in the valve, the float will again seal the orifice. The valve will be of such design that the float cannot blow shut at any air velocity. Valve inlet size shall be as shown on the Drawings. The Valve shall be manufactured by A.R.I. Flow Control Accessories.

C. Combination Air Valves: Combination air valves shall combine the features of an air release valve and an air/vacuum valve and shall be single body, double orifice, allowing large volumes of air to escape out the larger diameter air and vacuum orifice when filling a pipeline and closes watertight when the liquid enters the valve. During large orifice closure, the smaller diameter air release orifice will open to allow small pockets of air to escape automatically and independently of the large orifice. The large air/vacuum orifice shall also allow large volumes of air to enter through the orifice during pipeline drainage to break the vacuum. Valve sizes shall be as shown on the Drawings. The valve shall be ARI Model D-040 as manufactured by A.R.I. Flow Control Accessories.

D. Surge Check Valve: Where shown on the Drawings or specified, provide a surge check valve on the inlet of the air/vacuum valve. The surge check valve shall be normally open, spring loaded valve consisting of a body, seat and plug bolted to the inlet of the air/vacuum valve. The surge check shall operate on the interphase between the kinetic energy and relative velocity flows of air and water, allowing air to pass through but water shall close the surge check, reducing the rate of water flow by means of throttling orifices in the plug to prevent shock closure of the air/vacuum valve. The surge check orifices must be an adjustable type to suit operating conditions in the field.

E. All air valves and accessories shall be supplied by a single manufacturer.

2.08 Blowoff Hydrants

A. Blowoff hydrant shall be Model #77 Mainguard Hydrant manufactured by the Kupferle Foundry Company.

B. Where required, auto-flushing hydrants shall be manufactured by Hydro-Guard.

2.09 Manholes and Precast Concrete Products

A. Provide precast concrete products in accordance with the following:

1. Precast Concrete Sections

a. Precast concrete sections shall meet the requirements of ASTM C 478 for circular shaped and ASTM C913 for rectangular shaped precast products. The minimum compressive strength of the concrete in precast sections shall be 4,000 psi. The minimum wall thickness shall be one-twelfth of the inside diameter of the base, riser or the largest cone diameter.

b. Transition slabs which convert bases larger than four feet in diameter to four foot diameter risers shall be designed by the precast concrete manufacturer to carry the live and dead loads exerted on the slab.

c. Seal joints between precast sections by means of rubber O-ring gaskets or flexible butyl rubber sealant. Butyl rubber sealants shall meet the requirements of AASHTO M-198. Sealant shall be pre-formed type with a minimum nominal diameter of 1-inch.

d. Butyl rubber sealant shall be equal to Kent Seal No. 2 or Concrete Sealants CS 202.

2. Brick and Mortar: Brick shall be whole and hardburned, conforming to ASTM C 32, Grade MS. Mortar shall be made of one part Portland cement and two parts clean sharp sand. Cement shall be Type 1 and shall conform to ASTM C 150. Sand shall meet ASTM C 144.

3. Iron Castings

a. Cast iron manhole frames, covers and steps shall meet the requirements of ASTM A 48 for Class 30 gray iron and all applicable local standards. All castings shall be tough, close grained, smooth and free from blow holes, blisters, shrinkage, strains, cracks, cold shots and other imperfections. No casting will be accepted which weighs less than 95 percent of the design weight. Shop drawings must indicate the design weight and provide sufficient dimensions to permit checking. All castings shall be thoroughly cleaned in the shop and given two coats of approved bituminous paint before rusting begins.

b. Manhole frames and covers shall be equal to the following:

Type	Design Weight	Manufacturer's Reference
Standard & Traffic	340	Bouchard 1155

c. All frames and covers shall have machined horizontal bearing surfaces.

4. Plastic Steps: Manhole steps of polypropylene, molded around a steel rod, equal to products of M.A. Industries may be used.

2.10 Mechanical Joint Restraint

A. Retainer glands for ductile iron pipe shall be Megalug Series 1100, as manufactured by EBAA Iron, or Uni-Flange Series 1400, as manufactured by Ford Meter Box Company.

B. Retainer glands for polyvinyl chloride pipe shall be Megalug Series 2000 PV, as manufactured by EBAA Iron, or Uni-Flange Series 1300, as manufactured by Ford Meter Box Company.

2.11 Hydrant Tees

Hydrant tees shall be equal to ACIPCO A10180 or U.S. Pipe U-592.

2.12 Valve Keys

The Contractor shall provide to the Owner one valve key for every five valves provided, but no more than three and not less than one valve key. Valve keys shall be 72-inches long with a tee handle and a 2-inch square wrench nut. Valve keys shall be furnished by the valve manufacturer. Valve keys shall be equal to Mueller A-24610.

2.13 Anchor Couplings

Lengths and sizes shall be as shown on Drawings. Anchor couplings shall be equal to ACIPCO A 10895 or U.S. Pipe U-591.

2.14 Concrete

Concrete shall have a compressive strength of not less than 3000 psi, with not less than 5.5 bags of cement per cubic yard and a slump between 3 and 5-inches. For job mixed concrete, submit the concrete mix design for approval by the Engineer. Ready-mixed concrete shall be mixed and transported in accordance with ASTM C 94. Reinforcing steel shall conform to the requirements of ASTM A 615, Grade 60.

2.15 Precast Concrete Meter Vaults

A. The precast concrete vault shall be furnished to the dimensions shown and as specified on the Drawings.

B. Vault structural design shall conform to ASTM C-857 and shall be constructed to withstand H-20 load rating with a 30% impact factor.

C. Vault concrete, castings, and reinforcement shall be in accordance with this Section, Article 2.08 above unless otherwise specified on the Drawings or at the direction of

the Owner's representative.

D. Precast vaults shall be manufactured by Christy, Brooks, or approved equal.

Part 3 Execution

3.01 Existing Utilities and Obstructions

A. The Drawings indicate utilities or obstructions that are known to exist according to the best information available to the Owner. The Contractor shall call the Tennessee One Call System, Inc. (811 or 1-800-351-1111) as required by the Tennessee Law "Underground Utility Damage Prevention Act" (Code Section 65-31-106) and all utilities, agencies or departments that own and/or operate utilities in the vicinity of the construction work site at least 72 hours (three business days) prior to construction to verify the location of the existing utilities.

B. Existing Utility Location: The following steps shall be exercised to avoid interruption of existing utility service.

1. Provide the required notice to the utility owners and allow them to locate their facilities according to Tennessee law. Field utility locations are valid for only 10 days after original notice. The Contractor shall ensure, at the time of any excavation that a valid utility location exists at the point of excavation.

2. Expose the facility, for a distance of at least 200 feet in advance of pipeline construction, to verify its true location and grade. Repair, or have repaired, any damage to utilities resulting from locating or exposing their true location.

3. Avoid utility damage and interruption by protection with means or methods recommended by the utility owner.

4. Maintain a log identifying when phone calls were made, who was called, area for which utility relocation was requested and work order number issued, if any. The Contractor shall provide the Engineer an updated copy of the log bi-weekly, or more frequently if required.

C. Conflict with Existing Utilities

1. Horizontal Conflict: Horizontal conflict shall be defined as when the actual horizontal separation between a utility, main, or service and the proposed water main does not permit safe installation of the water main by the use of sheeting, shoring, tieing-back, supporting, or temporarily suspending service of the parallel or crossing facility. The Contractor may change the proposed alignment of the water main to avoid horizontal conflicts if the new alignment remains within the available right-of-way or easement, complies with regulatory agency requirements and after a written request to and subsequent approval by the Engineer. Where such relocation of the water main is denied by the Engineer, the Contractor shall arrange to have the utility, main, or service relocated.

2. Vertical Conflict: Vertical conflict shall be defined as when the actual vertical separation between a utility, main, or service and the proposed water main does not permit the crossing without immediate or potential future damage to the utility, main, service, or the water main. The Contractor may change the proposed grade of the water main to avoid vertical conflicts if the changed grade maintains adequate cover and complies with regulatory agencies requirements after written request to and subsequent approval by the Engineer. Where such relocation of the water main is denied by the Engineer, the Contractor shall arrange to have the utility, main, or service relocated.

D. Electronic Locator: Have available at all times an electronic pipe locator and a magnetic locator, in good working order, to aid in locating existing pipe lines or other obstructions.

E. Water and Sewer Separation

1. Water mains should maintain a minimum 10 foot edge-to-edge separation from sewer lines, whether gravity or pressure. If the main cannot be installed in the prescribed easement or right-of-way and provide the 10 foot separation, the separation may be reduced, provided the bottom of the water main is a minimum of 18-inches above the top of the sewer. Should neither of these two separation criteria be possible, the water main shall be installed below the sewer with a minimum vertical separation of 18-inches.

2. The water main, when installed below the sewer, shall be encased in concrete with a minimum 6-inch concrete depth to the first joint in each direction. Where water mains cross the sewer, the pipe joint adjacent to the pipe crossing the sewer shall be cut to provide maximum separation of the pipe joints from the sewer. A minimum of 18-inches of vertical clearance must be maintained at all times.

3. No water main shall pass through, or come in contact with, any part of a sanitary sewer manhole.

3.02 Construction Along Highways, Streets and Roadways

A. Install pipe lines and appurtenances along highways, streets and roadways in accordance with the applicable regulations of, and permits issued by, the Tennessee Department of Transportation and the county with reference to construction operations, safety, traffic control, road maintenance and repair.

B. Traffic Control

1. The Contractor shall provide, erect and maintain all necessary barricades, suitable and sufficient lights and other traffic control devices; provide qualified flagmen where necessary to direct traffic; take all necessary precautions for the protection of the work and the safety of the public.

2. Construction traffic control devices and their installation shall be in accordance

with the current Manual On Uniform Traffic Control Devices for Streets and Highways.

3. Placement and removal of construction traffic control devices shall be coordinated with the Tennessee Department of Transportation and the City of Portland a minimum of 48 hours in advance of the activity.

4. Placement of construction traffic control devices shall be scheduled ahead of associated construction activities. Construction time in street right-of-way shall be conducted to minimize the length of time traffic is disrupted. Construction traffic control devices shall be removed immediately following their useful purpose. Traffic control devices used intermittently, such as “Flagmen Ahead”, shall be removed and replaced when needed.

5. Existing traffic control devices within the construction work zone shall be protected from damage. Traffic control devices requiring temporary relocation shall be located as near as possible to their original vertical and horizontal locations. Original locations shall be measured from reference points and recorded in a log prior to relocation. Temporary locations shall provide the same visibility to affected traffic as the original location. Relocated traffic control devices shall be reinstalled in their original locations as soon as practical following construction.

6. Construction traffic control devices shall be maintained in good repair and shall be clean and visible to affected traffic for daytime and nighttime operation. Traffic control devices affected by the construction work zone shall be inspected daily.

7. Construction warning signs shall be black legend on an orange background. Regulatory signs shall be black legend on a white background. Construction sign panels shall meet the minimum reflective requirements of the Tennessee Department of Transportation and the county. Sign panels shall be of durable materials capable of maintaining their color, reflective character and legibility during the period of construction.

8. Channelization devices shall be positioned preceding an obstruction at a taper length as required by the current Manual On Uniform Traffic Control Devices for Streets and Highways, as appropriate for the speed limit at that location. Channelization devices shall be patrolled to insure that they are maintained in the proper position throughout their period of use.

C. Construction Operations

1. Perform all work along highways, streets and roadways to minimize interference with traffic.

2. Stripping: Where the pipe line is laid along road right-of-way, strip and stockpile all sod, topsoil and other material suitable for right-of-way restoration.

3. Trenching, Laying and Backfilling: Do not open the trench any further ahead of

pipe laying operations than is necessary. Backfill and remove excess material immediately behind laying operations. Complete excavation and backfill for any portion of the trench in the same day.

4. Shaping: Reshape damaged slopes, side ditches, and ditch lines immediately after completing backfilling operations. Replace topsoil, sod and any other materials removed from shoulders.

5. Construction operations shall be limited to 400 feet along areas, including clean-up and utility exploration.

D. Excavated Materials: Do not place excavated material along highways, streets and roadways in a manner which obstructs traffic. Sweep all scattered excavated material off of the pavement in a timely manner.

E. Drainage Structures: Keep all side ditches, culverts, cross drains, and other drainage structures clear of excavated material. Care shall be taken to provide positive drainage to avoid ponding or concentration of runoff.

F. Landscaping Features: Landscaping features shall include, but are not necessarily limited to: fences; property corners; cultivated trees and shrubbery; manmade improvements; subdivision and other signs within the right-of-way and easement. The Contractor shall take extreme care in moving landscape features and promptly re-establishing these features.

G. Maintaining Highways, Streets, Roadways and Driveways

1. Maintain streets, highways, roadways and driveways in suitable condition for movement of traffic until completion and final acceptance of the Work.

2. During the time period between pavement removal and completing permanent pavement replacement, maintain highways, streets and roadways by the use of steel running plates. Running plate edges shall have asphalt placed around their periphery to minimize vehicular impact. The backfill above the pipe shall be compacted as specified elsewhere up to the existing pavement surface to provide support for the steel running plates.

3. Furnish a road grader or front-end loader for maintaining highways, streets, and roadways. The grader or front-end loader shall be available at all times.

4. Immediately repair all driveways that are cut or damaged. Maintain them in a suitable condition for use until completion and final acceptance of the Work.

3.03 Pipe Distribution

A. Pipe shall be distributed and placed in such a manner that will not interfere with traffic.

B. No pipe shall be strung further along the route than 500 feet beyond the area in which the Contractor is actually working without written permission from the Owner. The

Owner reserves the right to reduce this distance to a maximum distance of 200 feet in residential and commercial areas based on the effects of the distribution to the adjacent property owners.

C. No street or roadway may be closed for unloading of pipe without first obtaining permission from the proper authorities. The Contractor shall furnish and maintain proper warning signs and obstruction lights for the protection of traffic along highways, streets and roadways upon which pipe is distributed.

D. No distributed pipe shall be placed inside drainage ditches.

E. Distributed pipe shall be placed as far as possible from the roadway pavement, but no closer than five feet from the roadway pavement, as measured edge-to-edge.

3.04 Location and Grade

A. The Drawings show the alignment of the water main and the location of valves, hydrants and other appurtenances. Water mains shall be constructed at a depth as specified in Section 31 23 33, Article 3.01, Paragraph D.

B. Prior to clearing and grubbing, the Engineer will provide a temporary bench mark along the water main route and and at all other locations where the alignment of the water main changes significantly.

C. Construction Staking

1. The base lines for locating the principal components of the work and a bench mark adjacent to the work are shown on the Drawings. Base lines shall be defined as the line to which the location of the water main is referenced, i.e., edge of pavement, road centerline, property line, right-of-way or survey line. The Contractor shall be responsible for performing all survey work required for constructing the water main, including the establishment of base lines and any detail surveys needed for construction. This work shall include the staking out of permanent and temporary easements to insure that the Contractor is not deviating from the designated easements.

2. The level of detail of survey required shall be that which the correct location of the water main can be established for construction and verified by the Engineer. Where the location of components of the water main, e.g. tunnels and fittings, are not dimensioned, the establishment on the location of these components shall be based upon scaling these locations from the Drawings with relation to readily identifiable land marks, e.g., survey reference points, power poles, manholes, etc.

D. Reference Points

1. The Contractor shall take all precautions necessary, which includes, but is not necessarily limited to, installing reference points, in order to protect and preserve the centerline or baseline established by the Engineer.

2. Reference points shall be placed, at or no more than three feet, from the outside of the construction easement or right-of-way. The location of the reference points shall be recorded in a log with a copy provided to the Engineer for use, prior to verifying reference point locations. Distances between reference points and the manhole centerlines shall be accurately measured to 0.01 foot.

3. The Contractor shall give the Engineer reasonable notice that reference points are set. The reference point locations must be verified by the Engineer prior to commencing clearing and grubbing operations.

E. After the Contractor locates and marks the water main centerline or baseline, the Contractor shall perform clearing and grubbing.

F. Construction shall begin at a connection location and proceed without interruption. Multiple construction sites shall not be permitted without written authorization from the Engineer for each site.

G. The Contractor shall be responsible for any damage done to reference points, base lines, center lines and temporary bench marks, and shall be responsible for the cost of re-establishment of reference points, base lines, center lines and temporary bench marks as a result of the operations.

3.05 Laying and Jointing Pipe and Accessories

A. Lay all pipe and fittings to accurately conform to the lines and grades established by the Engineer.

B. Pipe Installation

1. Proper implements, tools and facilities shall be provided for the safe performance of the Work. All pipe, fittings, valves and hydrants shall be lowered carefully into the trench by means of slings, ropes or other suitable tools or equipment in such a manner as to prevent damage to water main materials and protective coatings and linings. Under no circumstances shall water main materials be dropped or dumped into the trench.

2. All pipe, fittings, valves, hydrants and other appurtenances shall be examined carefully for damage and other defects immediately before installation. Defective materials shall be marked and held for inspection by the Engineer, who may prescribe corrective repairs or reject the materials.

3. All lumps, blisters and excess coating shall be removed from the socket and plain ends of each pipe, and the outside of the plain end and the inside of the bell shall be wiped clean and dry and free from dirt, sand, grit or any foreign materials before the pipe is laid. No pipe containing dirt shall be laid.

4. Foreign material shall be prevented from entering the pipe while it is being

placed in the trench. No debris, tools, clothing or other materials shall be placed in the pipe at any time.

5. As each length of pipe is placed in the trench, the joint shall be assembled and the pipe brought to correct line and grade. The pipe shall be secured in place with approved backfill material.

6. It is not mandatory to lay pipe with the bells facing the direction in which work is progressing.

7. Applying pressure to the top of the pipe, such as with a backhoe bucket, to lower the pipe to the proper elevation or grade, shall not be permitted.

8. Provide detection wire for all non-metallic pipe. Detection wire shall be installed with the pipe and fastened to the crown of the pipe. The ends of the wire shall be brought up through valve boxes within 4-inches from the top. Where required, detection wire shall be buried 4 to 10 inches beneath the ground surface directly over the top of the pipe. In no case shall detection wire be buried greater than 2 feet from finished grade.

C. Alignment and Gradient

1. Lay pipe straight in alignment and gradient or follow true curves as nearly as practicable. Do not deflect any joint more than the maximum deflection recommended by the manufacturer.

2. Maintain a transit, level and accessories on the job to lay out angles and ensure that deflection allowances are not exceeded.

D. Expediting of Work: Excavate, lay the pipe, and backfill as closely together as possible. Do not leave unjointed pipe in the trench overnight. Backfill and compact the trench as soon as possible after laying and jointing is completed. Cover the exposed end of the installed pipe each day at the close of work and at all other times when work is not in progress. If necessary to backfill over the end of an uncompleted pipe or accessory, close the end with a suitable plug, either push-on, mechanical joint, restrained joint or as approved by the Engineer.

E. Joint Assembly

1. Push-on, mechanical, flange and restrained type joints shall be assembled in accordance with the manufacturer's recommendations.

2. The Contractor shall inspect each pipe joint within 1,000 feet on either side of main line valves to insure 100 percent seating of the pipe spigot, except as noted otherwise.

3. Each restrained joint shall be inspected by the Contractor to ensure that it has been “homed” 100 percent.

4. The Contractor shall internally inspect each pipe joint to insure proper assembly

for pipe 24-inches in diameter and larger after the pipe has been brought to final alignment.

F. Cutting Pipe: Cut ductile iron pipe using an abrasive wheel saw. Cut PVC pipe using a suitable saw; remove all burrs and smooth the end before jointing. The Contractor shall cut the pipe and bevel the end, as necessary, to provide the correct length of pipe necessary for installing the fittings, valves, accessories and closure pieces in the correct location. Only push-on or mechanical joint pipe shall be cut.

G. Valve and Fitting Installation

1. Prior to installation, valves shall be inspected for direction of opening, number of turns to open, freedom of operation, tightness of pressure-containing bolting and test plugs, cleanliness of valve ports and especially seating surfaces, handling damage and cracks. Defective valves shall be corrected or held for inspection by the Engineer. Valves shall be closed before being installed.

2. Valves, fittings, plugs and caps shall be set and joined to the pipe in the manner specified in this Section for cleaning, laying and joining pipe, except that 12-inch and larger valves shall be provided with special support, such as treated timbers, crushed stone, concrete pads or a sufficiently tamped trench bottom so that the pipe will not be required to support the weight of the valve. Valves shall be installed in the closed position.

3. A valve box shall be provided on each underground valve. They shall be carefully set, centered exactly over the operating nut and truly plumbed. The valve box shall not transmit shock or stress to the valve. The bottom flange of the lower belled portion of the box shall be placed below the valve operating nut. This flange shall be set on brick, so arranged that the weight of the valve box and superimposed loads will bear on the base and not on the valve or pipe. Extension stems shall be installed where depth of bury places the operating nut in excess of 30-inches beneath finished grade so as to set the top of the operating nut 30-inches below finished grade. The valve box cover shall be flush with the surface of the finished area or such other level as directed by the Engineer.

4. In no case shall valves be used to bring misaligned pipe into alignment during installation. Pipe shall be supported in such a manner as to prevent stress on the valve.

5. A valve marker shall be provided for each underground valve. Unless otherwise detailed on the Drawings or directed by the Engineer, valve markers shall be installed 6-inches inside the right-of-way or easement.

H. Hydrant Installation

1. Prior to installation, inspect all hydrants for direction of opening, nozzle threading, operating nut and cap nut dimensions, tightness of pressure-containing bolting, cleanliness of inlet elbow, handling damage and cracks. Defective hydrants shall be corrected or held for inspection by the

Engineer.

2. All hydrants shall stand plumb and shall have their nozzles parallel with or at right angles to the roadway, with pumper nozzle facing the roadway, except that hydrants having two-hose nozzles 90 degrees apart shall be set with each nozzle facing the roadway at an angle of 45 degrees.

3. Hydrants shall be set to the established grade, with the centerline of the lowest nozzle at least 12-inches above the ground or as directed by the Engineer.

4. Each hydrant shall be connected to the main with a 6-inch branch controlled by an independent 6-inch valve. When a hydrant is set in soil that is pervious, drainage shall be provided at the base of the hydrant by placing coarse gravel or crushed stone mixed with coarse sand from the bottom of the trench to at least 6-inches above the drain port opening in the hydrant to a distance of 12-inches around the elbow.

5. When a hydrant is set in clay or other impervious soil, a drainage pit 2 x 2 x 2 feet shall be excavated below each hydrant and filled with coarse gravel or crushed stone mixed with coarse sand under and around the elbow of the hydrant and to a level of 6-inches above the drain port.

6. Hydrants shall be located as shown on the Drawings or as directed by the Engineer. In the case of hydrants that are intended to fail at the ground-line joint upon vehicle impact, specific care must be taken to provide adequate soil resistance to avoid transmitting shock moment to the lower barrel and inlet connection. In loose or poor load bearing soil, this may be accomplished by pouring a concrete collar approximately 6-inches thick to a diameter of 24-inches at or near the ground line around the hydrant barrel.

I. Air Valve Vaults

1. Construct the vault or manhole as detailed on the Drawings.

2. Air release valves and vaults shall be installed on water lines at all high points as shown on the Drawings.

3. Manholes shall be constructed such that their walls are plumb.

3.06 Connections to Water Mains

A. Make connections to existing pipe lines with tapping sleeves and valves or saddle, unless specifically shown otherwise on the Drawings.

B. Location: Before laying pipe, locate the points of connection to existing water mains and uncover as necessary for the Engineer to confirm the nature of the connection to be made.

C. Interruption of Services: Make connections to existing water mains only when system

operations permit. Operate existing valves only with the specific authorization and direct supervision of the Owner.

D. Tapping Saddles and Tapping Sleeves

1. Holes in the new pipe shall be machine cut, either in the field or at the factory. No torch cutting of holes shall be permitted.

2. Prior to attaching the saddle or sleeve, the pipe shall be thoroughly cleaned, utilizing a brush and rag, as required.

3. Before performing field machine cut, the watertightness of the saddle or sleeve assembly shall be pressure tested. The interior of the assembly shall be filled with water. An air compressor shall be attached, which will induce a test pressure as specified in this Section. No leakage shall be permitted for a period of five minutes.

4. After attaching the saddle or sleeve to an existing main, but prior to making the tap, the interior of the assembly shall be disinfected. All surfaces to be exposed to potable water shall be swabbed or sprayed with a one percent hypochlorite solution.

E. Connections Using Solid Sleeves: Where connections are shown on the Drawings using solid sleeves, the Contractor shall furnish materials and labor necessary to make the connection to the existing pipe line.

F. Connections Using Couplings: Where connections are shown on the Drawings using couplings, the Contractor shall furnish materials and labor necessary to make the connection to the existing pipe line, including all necessary cutting, plugging and backfill.

3.07 Thrust Restraint

A. Provide restraint at all points where hydraulic thrust may develop. All tees, valves, angles, or bends in the pipe lines shall be satisfactorily restrained and anchored against the tendency for movement with mechanical joint restraints and concrete thrust blocks.

B. Provide retainer glands where shown on the Drawings and on fire hydrants and all associated fittings, valves and related piping. Retainer glands shall be installed in accordance with the manufacturer's recommendations, particularly, the required torque of the set screws. The Contractor shall furnish a torque wrench to verify the torque on all set screws which do not have inherent torque indicators.

C. Harnessing

1. Provide harness rods only where specifically shown on the Drawings or directed by the Engineer.

2. Harness rods shall be manufactured in accordance with ASTM A 36 and shall have an allowable tensile stress of no less than 22,000 psi. Harness rods shall be hot dip galvanized or field coated with bitumastic before backfilling.

3. Where possible, harness rods shall be installed through the mechanical joint bolt holes. Where it is not possible, provide 90 degree bend eye bolts.

4. Eye bolts shall be of the same diameter as specified in AWWA C111 for that pipe size. The eye shall be welded closed. Where eye bolts are used in conjunction with harness rods, an appropriate size washer shall be utilized with a nut on each end of the harness rod. Eye bolts shall be of the same material and coating as the harness rods.

D. Hydrants: Hydrants shall be attached to the water main by the following method:

1. For all new mains, the isolation valve shall be attached to the main by connecting the valve to the hydrant tee.

2. For all existing mains, the isolation valve shall be attached to the main by providing retainer glands between the valve and tapping saddle.

3. The isolation valve shall be attached to the hydrant by providing retainer glands between the valve and hydrant.

E. Thrust Collars: Collars shall be constructed as shown on the Drawings. Concrete and reinforcing steel shall meet the requirements as specified in this Section. The welded-on collar shall be designed to meet the minimum allowable load shown on the Drawings. The welded-on collar shall be attached to the pipe by the pipe manufacturer.

F. Concrete Blocking

1. Provide concrete blocking for all bends, tees, valves, and other points where thrust may develop, except where other exclusive means of thrust restraint are specifically shown on the Drawings.

2. Concrete shall be as specified in this Section.

3. Form and pour concrete blocking at fittings as shown on the Drawings and as directed by the Engineer. Pour blocking against undisturbed earth. Increase dimensions when required by over excavation.

3.08 Inspection and Testing

A. Pressure and Leakage Test

1. All sections of the water main and service lines subject to internal pressure shall be pressure tested in accordance with AWWA C600. A section of main will be considered ready for testing after completion of all thrust restraint and

backfilling.

2. Each segment of water main between main valves shall be tested individually.

3. Test Preparation

   a. For water mains less than 24-inches in diameter, flush sections thoroughly at flow velocities, greater than 2.5 feet per second, adequate to remove debris from pipe and valve seats. For water mains 24-inches in diameter and larger, the main shall be carefully swept clean, and mopped if directed by the Engineer. Partially open valves to allow the water to flush the valve seat.

   b. Partially operate valves and hydrants to clean out seats.

   c. Provide temporary blocking, bulkheads, flanges and plugs as necessary, to assure all new pipe, valves, and appurtenances will be pressure tested.

   d. Before applying test pressure, air shall be completely expelled from the pipeline and all appurtenances. Insert corporation cocks at highpoints to expel air as main is filled with water as necessary to supplement automatic air valves. Corporation stops shall be constructed as detailed on the Drawings with a meter box.

   e. Fill pipeline slowly with water. Provide a suitable pump with an accurate water meter to pump the line to the specified pressure.

   f. The differential pressure across a valve or hydrant shall equal the maximum possible, but not exceed the rated working pressure. Where necessary, provide temporary backpressure to meet the differential pressure restrictions.

   g. Valves shall not be operated in either the opening or closing direction at differential pressures above the rated pressure.

4. Test Pressure: Test the pipeline at 150 psi measured at the lowest point for at least two hours. Maintain the test pressure within 5 psi of the specified test pressure for the test duration. Should the pressure drop more than 5 psi at any time during the test period, the pressure shall be restored to the specified test pressure. The source of the pressure drop shall be identified and repaired. Provide an accurate pressure gage with graduation not greater than 2 psi. Pressure testing must be performed in the presence of the Inspector.

5. Leakage

   a. Leakage shall be defined as the sum of the quantity of water that must be pumped into the test section, to maintain pressure within 5 psi of the specified test pressure for the test duration plus water required to return line to test pressure at the end of the test. Leakage shall be the total cumulative amount measured on a water meter.

b. The Owner assumes no responsibility for leakage occurring through existing valves.

6. Test Results: No test section shall be accepted if the leakage exceeds the limits determined by the following formula:

$$L = \frac{SD\,(P)^{1/2}}{148{,}000}$$

Where:
- L = allowable leakage, in gallons per hour
- S = length of pipe tested, in feet
- D = nominal diameter of the pipe, in inches
- P = average test pressure during the leakage test, in pounds per square inch (gauge)

As determined under Section 5 of AWWA C600.

If the water main section being tested contains lengths of various pipe diameters, the allowable leakage shall be the sum of the computed leakage for each diameter. The leakage test shall be repeated until the test section is accepted. All visible leaks shall be repaired regardless of leakage test results.

7. Completion: After a pipeline section has been accepted, relieve test pressure. Record type, size and location of all outlets on record drawings.

3.10 Disinfecting Pipeline

A. After successfully pressure testing each pipeline section, disinfect in accordance with AWWA C651 for the continuous-feed method and these Specifications.

B. Specialty Contractor: Disinfection shall be performed by an approved specialty contractor. Before disinfection is performed, the Contractor shall submit a written procedure for approval before being permitted to proceed with the disinfection. This plan shall also include the steps to be taken for the neutralization of the chlorinated water.

C. Chlorination

1. Apply chlorine solution to achieve a concentration of at least 25 milligrams per liter free chlorine in new line. Retain chlorinated water for 24 hours.

2. Chlorine concentration shall be recorded at every outlet along the line at the beginning and end of the 24 hour period.

3. After 24 hours, all samples of water shall contain at least 10 milligrams per liter free chlorine. Re-chlorinate if required results are not obtained on all samples.

D. Disposal of Chlorinated Water: Reduce chlorine residual of disinfection water to less

than one milligram per liter if discharged directly to a body of water or to less than two milligrams per liter if discharged onto the ground prior to disposal. Treat water with sulfur dioxide or other reducing chemicals to neutralize chlorine residual. Flush all lines until residual is equal to existing system.

E. Bacteriological Testing: After final flushing and before the water main is placed in service, the Contractor shall collect samples from the line and have tested for bacteriological quality in accordance with the rules of the Tennessee Department of Environment and Conservation (TDEC). The bacteriological samples shall be analyzed for both coliform and non-coliform growth. Testing shall be performed by a laboratory certified by the State of Tennessee. Two or more successive sets of samples, taken at 24 hour intervals, shall indicate bacteriologically satisfactory water and the results shall be submitted to TDEC. Re-chlorinate lines until required results are obtained.

3.11 Protection and Restoration of Work Area

A. General: Return all items and all areas disturbed, directly or indirectly by work under these Specifications, to their original condition or better, as quickly as possible after work is started.

1. The Contractor shall plan, coordinate, and prosecute the work such that disruption to personal property and business is held to a practical minimum.

2. All construction areas abutting lawns and yards of residential or commercial property shall be restored promptly. Backfilling of underground facilities, ditches, and disturbed areas shall be accomplished on a daily basis as work is completed. Finishing, dressing, and grassing shall be accomplished immediately thereafter, as a continuous operation within each area being constructed and with emphasis placed on completing each individual yard or business frontage. Care shall be taken to provide positive drainage to avoid ponding or concentration of runoff.

3. Handwork, including raking and smoothing, shall be required to ensure that the removal of roots, sticks, rocks, and other debris is removed in order to provide a neat and pleasing appearance.

4. The Department of Transportation's engineer shall be authorized to stop all work by the Contractor when restoration and cleanup are unsatisfactory and to require appropriate remedial measures.

B. Man-Made Improvements: Protect, or remove and replace with the Engineer's approval, all fences, walkways, mail boxes, pipe lines, drain culverts, power and telephone lines and cables, property pins and other improvements that may be encountered in the Work.

C. Cultivated Growth: Do not disturb cultivated trees or shrubbery unless approved by the Engineer. Any such trees or shrubbery which must be removed shall be heeled in and replanted under the direction of an experienced nurseryman.

D. Cutting of Trees: Do not cut trees for the performance of the work except as absolutely necessary. Protect trees that remain in the vicinity of the work from damage from equipment. Do not store spoil from excavation against the trunks. Remove excavated material stored over the root system of trees within 30 days to allow proper natural watering of the root system. Repair any damaged tree over 3-inches in diameter, not to be removed, under the direction of an experienced nurseryman. All trees and brush that require removal shall be promptly and completely removed from the work area and disposed of by the Contractor. No stumps, wood piles, or trash piles will be permitted on the work site.

E. Disposal of Rubbish: Dispose of all materials cleared and grubbed during the construction of the Project in accordance with the applicable codes and rules of the appropriate county, state and federal regulatory agencies.

F. Swamps and Other Wetlands

1. The Contractor shall not construct permanent roadbeds, berms, drainage structures or any other structures which alter the original topographic features within the easement.

2. All temporary construction or alterations to the original topography will incorporate measures to prevent erosion into the surrounding swamp or wetland. All areas within the easement shall be returned to their original topographic condition as soon as possible after work is completed in the area. All materials of construction and other non-native materials shall be disposed by the Contractor.

3. The Contractor shall provide temporary culverts or other drainage structures, as necessary, to permit the free migration of water between portions of a swamp, wetland or stream which may be temporarily divided by construction.

4. The Contractor shall not spread, discharge or dump any fuel oil, gasoline, pesticide, or any other pollutant to adjacent swamps or wetlands.

3.12 Abandoning Existing Water Mains

A. General: Abandon in place all existing water main segments indicated on the Drawings to be abandoned. Perform abandonment after the new water main has been placed in service and all water main services have been changed over to the new main. Salvage for the Owner, existing fire hydrants, valve boxes, valve markers, and other materials indicated on the Drawings or located on water mains abandoned.

B. Capping and Plugging: Disconnect by sawing or cutting and removing a segment of existing pipe where cutting and capping or plugging is shown on the Drawings or directed by the Engineer. Provide a watertight pipe cap or plug and concrete blocking for restraint to seal off existing mains indicated to remain in service. Seal ends of existing mains to be abandoned with a pipe cap or plug or with a masonry plug and minimum 6-inch cover of concrete on all sides around the end of the pipe. The

Contractor shall be responsible for uncovering and verifying the size and material of the existing main to be capped or plugged.

C. Salvaging Materials: Salvage existing fire hydrants, valve boxes, valve markers and other materials as indicated on the Drawings and deliver salvaged items in good condition to the Owner's storage yard. Coordinate delivery and placement of salvaged materials in advance with the Owner.

D. Blow-Off Piping: Remove existing blow-off piping, located on segments of water mains to be abandoned, to a minimum of two feet below finished grade. Seal the end of remaining piping as specified above in paragraph B. Blow-off piping removed becomes the property of the Contractor.

E. Pavement Removal and Replacement: Perform any necessary pavement removal and replacement in accordance with the details on the Drawings and Section 32 10 13 of these Specifications.

END OF SECTION

Part 1 General

1.01 Scope

A. The work covered by this Section includes furnishing all materials and equipment, providing all required labor and installing water service connections and all appurtenant work according to these Specifications and/or to the Water Connection Details as shown schematically on the Drawings.

B. Water meters are not to be furnished nor installed. However, the water meter connection must be compatible with the water meters currently used by the Owner.

1.02 Locations

Locations shall be directed by the Engineer along the route of the water mains.

1.03 Service Compatibility

It is the intent of these Specifications that the water service connections shall duplicate those presently being provided by the Owner in order to be compatible with their service maintenance procedures.

1.04 Quality Control

All materials installed under this Section shall have the approval of the NSF for water services.

1.05 Submittals

The contractor shall provide shop drawings, engineering data, and product data to the Engineer for review.

Part 2 Products

2.01 Materials and Construction

A. Service Line

1. Polyethylene (PE) Tubing: The water service line shall be copper tube size polyethylene tubing conforming to or exceeding the requirements of ASTM D 2737. Working pressure rating shall be minimum of 160 psi with minimum burst pressure of 630 psi at 73.4 degrees F. This material shall be used for temporary services only.

2. Copper Tubing: Tubing shall be ASTM B 88, Type K. Fittings shall be brass with compression connection inlets and outlets, ANSI B16.26. Where required,

adapters shall be brass ANSI B16.18. Unions shall be cast bronze. Joints shall be compression type. All fittings shall be of bronze construction with compression type connection.

3. Polyvinyl Chloride Pipe (PVC)

a. Pipe 1-1/2 Through 3-Inches in Diameter: All PVC pipe shall have belled ends for push-on type jointing and shall conform to ASTM D 2241. The pipe shall have a Standard Dimension Ratio (SDR) of 21 and shall be capable of withstanding a working pressure of 200 psi. Pipe shall be supplied in minimum lengths of 20 feet.

b. Pipe Less Than 1-1/2-Inches in Diameter: All PVC pipe shall have glued joints and belled ends and shall conform to ASTM D 1785. All pipe shall be Schedule 40 except where Schedule 80 is specified or shown on the Drawings.

c. All fittings shall be of the same material, strength and dimension as the pipe. Special adapters shall be provided as recommended by the manufacturer to adapt the PVC pipe to mechanical jointing with cast or ductile iron pipe, fittings or valves.

d. Acceptance will be on the basis of the Engineer's inspection and the manufacturer's written certification that the pipe was manufactured and tested in accordance with the applicable standards, including the National Sanitation Foundation. Additionally, each piece of pipe shall be stamped “NSF Approved”.

B. Meter Box

1. Plastic meter boxes for ¾” and 1” services shall be Carson Industries Model BC1015-18.

2. Plastic meter boxes for 2” services shall be Carson Industries Model BC1324-18.

3. Meter box shall be fitted with cast iron flush cover and reader lid.

4. If ordered by the Owner’s representative, precast concrete meter vault shall be provided. See Section 33 10 00 for precast concrete meter vault specifications.

C. Meter Setter: ¾-inch and 1-inch meter setters shall be the straight-line type with compression by compression ends. Setters shall have an inlet key valve cut-off with lock wings. ¾-inch line setters shall be Ford LSV41-233W-G-NL or approved equal. 1-inch line setters shall be Ford LSV41-444W-G-NL or approved equal. The 2-inch setter must be a custom setter type with female threaded inlet and outlet, and 12-inch rise. The setter shall have an inlet ball valve and outlet angle check valve with no bypass. 2-inch custom setters shall be Ford VBH77-12-11-77-NL or approved equal. A minimum of 3-inches crushed stone must be laid under the setter. The valve on the setter shall remain in the closed position after installation. All meter setters shall

comply with amended safe Drinking Water Act for lead reduction.

D. Valves and Accessories

1. Valves – 3-inch diameter and smaller: Gate valves shall be bronze, heavy duty, rising stem, wedge type with screwed or union bonnet. Valve ends shall be threaded. Valves shall have a minimum 200 psi working pressure for water (125 psi working pressure for steam). Valves shall be made in the U.S.A. Gate valves shall be equal to Crane No. 428. See Section 33 10 00 for gate valves 4-inch and larger.

2. Corporation Stops and Curb Stops

a. Corporation stops and curb stops shall be ground key type, shall be made of bronze conforming to ASTM B61 or B62 and shall be suitable for the working pressure of the system. Outlets shall be suitable for compression type joint. Threaded inlets of corporation stops shall conform to AWWA C800; coupling nut for connection to flared copper tubing shall conform to ANSI B16.26.

b. Corporation stops and curb stops for ¾-inch and 1-inch services shall be Ford F1000G-NL.

c. Corporation stops and curb stops for 2-inch services shall be Ford FB1000-NL.

d. All corporation stops shall comply with amended Safe Drinking Water Act for lead reduction.

3. Saddles

a. Saddles for mains consisting of SDR 21 pipe shall be brass with single straps. Ford models S70-603 and S70-604 shall be used for ¾”- and 1”-inch taps respectively.

b. Saddles for mains consisting of C900 and ductile iron pipe shall be brass with double straps. Ford models S90-603 and S90-604 shall be used for ¾- and 1-inch taps respectively.

E. Meters: 3/4-inch, 1-inch, and 2-inch meters shall be furnished by the City of Portland.

F. Connections to Water Mains

1. Connections to water mains for ¾-inch and 1-inch services shall be by the direct tap method or service saddle, as detailed on the Drawings in full accordance with AWWA requirements. 2-inch connections shall have a saddle with a 2-inch threaded bronze gate valve. The corporation stop and gate valve are to be left in the open position after the tap has been made and the setter installed.

2. Pressure ratings shall be as required for the installation.

Part 3 Execution

3.01 Installation

A. Water Service Connections

1. Water service connections shall be installed to the properties adjacent to the water transmission mains both to the same side of the roadway (Short Side Service) and to the opposite side of the roadway (Long Side Service) as directed by the Engineer.

2. Water service connections installed under roadway shall be pulled through a casing. Casings shall be installed in an open trench or through a bored hole approximately equal in diameter to the external diameter of the casing. Minimum cover under roadway shall be 40 inches. At other locations, minimum cover shall be two feet.

3. Installation shall conform to the details for water service connections appearing schematically on the Drawings. Contractor shall provide any and all appurtenant work required to provide the intended water service connections.

B. Permanent Water Services

1. Each new ¾- or 1-inch service line shall be tapped into the main through a corporation stop, utilizing a service saddle, as detailed on the Drawings. 2-inch taps are to be made with threaded bronze bodied gate valves. A new service line shall be provided to the meter as shown on the Drawings.

2. A corporation stop or gate valve shall be provided in the water main for each service line.

3. A service line, sized to match the existing line unless directed otherwise by the Engineer, shall be provided between the corporation cock and curb stop.

C. Temporary Water Services: Temporary services shall consist of relocating an existing water meter to just outside the construction limits to clear proposed grading by the DOT Contractor. Temporary services shall include connecting the relocated meter to the existing or new water main as appropriate by means of a new polyethylene service line and any additional depth service line installation required to clear proposed grading work.

D. Relocation of Service Lines

1. Relocate the existing meter to the new right-of-way limits and reconnect to the house service. Existing meters already located at the new right-of-way limits will not need relocating.

2. Before disconnecting the existing meter, the existing corporation in the main

shall be closed. All existing meters and meter boxes shall be removed, if not already located at the right-of-way, reinstalled and reconnected as indicated on the Drawings.

3. Existing service lines shall be field-located by the Contractor. The Contractor shall be responsible for locating existing water meters, relocating the meters and meter boxes as necessary, and determining the existing size service line to reconnect the meters to the new water mains. All service lines installed under existing pavement, including streets, driveways and sidewalks, shall be installed by boring.

4. The Contractor shall be prepared to make emergency repairs to the water system, if necessary, due to damage by others working in the area. In conjunction with this requirement, the Contractor shall furnish and have available at all times, a tapping machine, for the purpose of making temporary water service taps or emergency repairs to damaged water services.

E. Transfer of Service: Immediately before connecting to the relocated or existing meter, all service lines shall be flushed to remove any foreign matter. Any special fittings required to reconnect the existing meter to the new copper service line, or the existing private service line, shall be provided by the Contractor. To minimize out of service time, the Contractor shall determine the connections to be made and have all the required pipe and fittings on hand before shutting off the existing service. After completing the connection, the new corporation stop shall be opened and all visible leaks shall be repaired.

END OF SECTION

Part 1 General

1.01 Scope

A. This Section describes products to be incorporated into sewers and accessories and requirements for the installation and use of these items. Furnish all products and perform all labor necessary to fulfill the requirements of these Specifications.

B. General: Supply all products and perform all work in accordance with applicable American Society for Testing and Material (ASTM), American Water Works Association (AWWA), American National Standards Institute (ANSI), or other recognized standards. Latest revisions of all standards are applicable.

1.02 Qualifications

If requested by the Engineer, submit evidence that manufacturers have consistently produced products of satisfactory quality and performance for a period of at least two years.

1.03 Submittals

Complete shop drawings, product data and engineering data shall be submitted to the Engineer.

1.04 Transportation and Handling

A. Unloading: Furnish equipment and facilities for unloading, handling, distributing and storing pipe, fittings, valves and accessories. Make equipment available at all times for use in unloading. Do not drop or dump materials. Any materials dropped or dumped will be subject to rejection without additional justification.

B. Handling: Handle pipe, fittings, valves and accessories carefully to prevent shock or damage. Handle pipe by rolling on skids, forklift, or front loader. Do not use material damaged in handling.

C. Lined pipe shall be handled and transported to prevent damage to linings.

1.05 Storage and Protection

A. Store all pipe which cannot be distributed along the route. Make arrangements for the use of suitable storage areas.

B. Stored materials shall be kept safe from damage. The interior of all pipe, fittings and other appurtenances shall be kept free from dirt or foreign matter at all times.

C. Pipe shall not be stacked higher than the limits recommended by the manufacturer. The bottom tier shall be kept off the ground on timbers, rails or concrete. Pipe in tiers shall be alternated: bell, plain end; bell, plain end. At least two rows of timbers shall

be placed between tiers and chocks, affixed to each other in order to prevent movement. The timbers shall be large enough to prevent contact between the pipe in adjacent tiers.

D. Store joint gaskets in a cool location, out of direct sunlight. Gaskets shall not come in contact with petroleum products. Gaskets shall be used on a first-in, first-out basis.

1.06 Quality Assurance

A. Product manufacturers shall provide the Engineer with written certification that all products furnished comply with all applicable provisions of these Specifications. All materials which fail to conform to these Specifications shall be rejected.

B. If ordered by the Engineer, each pipe manufacturer shall furnish the services of a competent factory representative to supervise and/or inspect the installation of pipe. This service will be furnished for a minimum of five days during initial pipe installation.

C. After delivery to the site, any materials which have been damaged in transit or are unsuitable for use in the work shall be rejected and removed from the site.

Part 2 Products

2.01 Ductile Iron Pipe (DIP)

A. Ductile iron pipe shall be manufactured in accordance with AWWA C151. All pipe, except specials, shall be furnished in nominal lengths of 18 to 20 feet. Sizes will be as shown on the Drawings. All pipe shall have a minimum pressure rating as indicated in the following table, and corresponding minimum wall thickness, unless otherwise specified or shown on the Drawings:

Pipe Sizes (inches)	Pressure Class (psi)
4 - 12	350
16 - 24	250

B. Pipe shall be cement lined in accordance with AWWA C104. Pipe shall be furnished with a bituminous outside coating.

C. Fittings shall be ductile iron and shall conform to AWWA C110 or AWWA C153 with a minimum rated working pressure of 250 psi. Fittings shall be cement lined in accordance with AWWA C104 and shall be furnished with a bituminous outside coating. In lieu of cement lining and bituminous coating, fittings may be provided with a fusion bonded coating and lining meeting the requirements of AWWA C116.

D. Joints:

1. Unless shown or specified otherwise, joints shall be push-on or restrained joint type for pipe and standard mechanical, push-on or restrained joints for fittings.

Push-on and mechanical joints shall conform to AWWA C111.

2. Restrained joints shall be equal to American “FLEX-RING, Clow “SUPER-LOCK” or U.S. “TR-FLEX”.

3. Provide the appropriate gaskets for joints. Gaskets for flange joints shall be made of 1/8-inch thick, cloth reinforced rubber; gaskets may be ring type or full face type.

4. Provide the necessary bolts for mechanical and restrained connections. Bolts for flange connections shall be steel with American Regular unfinished square or hexagon heads. Nuts shall be steel with American Standard Regular hexagonal dimensions, all as specified in ANSI B17.2. All bolts and nuts shall be threaded in accordance with ANSI B1.1, Coarse Thread Series, Class 2A and 2B fit. Mechanical joint glands shall be ductile iron.

E. Special Lining

1. Where shown on Drawings or where specified, pipe and fittings shall be lined with ceramic epoxy as specified below.

2. Special linings shall cover all exposed surfaces of pipe and fittings subject to contact with sewer liquid or gas. The lining of the pipe barrel shall extend from spigot end through the socket to the edge of the gasket sealing area or recess for pipe using push-on gaskets, and to the edge of the gasket seat for mechanical joints. The lining shall also cover the exterior of the spigot end from the end of the pipe to beyond the gasket sealing area. The lining in fittings shall cover the interior surfaces including the socket areas as defined above. All linings shall be hermetically sealed at the ends.

F. Ceramic Epoxy Lining (all pipe diameters)

1. Lining Material: The lining material shall be Protecto 401 Ceramic Epoxy, an amine cured novalac epoxy containing at least 20 percent by volume of ceramic quartz pigment. The material shall meet the following minimum requirements:

a. A permeability rating of 0.00 when tested according to Method A of ASTM E-96-66, Procedure A with a test duration of 30 days.

b. The following test shall be run on coupons from factory lined ductile iron pipe:

i. ASTM B-117 Salt Spray (scribed panel) – Results to equal 0.0 undercutting after two years.

ii. ASTM G-95 Cathodic Disbondment 1.5 volts @ 77° F. Results to equal no more than 0.5 mm undercutting after 30 days.

iii. Immersion Testing rated using ASTM D-714-87.

1) 20% Sulfuric Acid – No effect after two years.

2) 140° F 25% Sodium Hydroxide – No effect after two years.

3) 160° F Distilled Water – No effect after two years.

4) 120° F Tap Water (scribed panel) – 0.0 undercutting after two years with no effect.

c. An abrasion resistance of no more than 3 mils (.075 mm) loss after one million cycles using European Standard EN 598: 1994 Section 7.8 Abrasion Resistance.

2. Surface Preparation: Surface preparation shall consist of the ductile iron surface to a near-gray blast finish. This degree of cleanliness is comparable to a SSPC-SP10 for steel with the exception that ductile iron attains a gray color when blast cleaned. The blast cleaning operation shall remove 95% of all surface contaminants, including tightly adhered annealing scale. The anchor tooth pattern, resulting from the blasting operation, shall have a minimum height of 3.0 mils.

3. Applicators: The lining shall be applied using a centrifugal lance applicator by applicators certified by the lining manufacturer. The workers shall be experienced and competent in the surface preparation, application and inspection of the lining to be applied.

4. Lining: After the surface preparation and within 8 hours of surface preparation, the interior of the pipe shall receive 40 mils nominal dry film thickness of Protecto 401. Minimum thickness shall be 30 mils. No lining shall take place when the substrate or ambient temperature is below 40 degrees Fahrenheit. The surface shall be dry and dust free. If flange pipe or fittings are lined, the lining shall not be used on the face of the flange.

5. Bell Sockets and Spigot Ends: The gasket area and spigot end up to 6 inches back from the end of the spigot end shall be coated with 6 mils nominal, 10 mils maximum, using Protecto Joint Compound. The Joint Compound shall be applied by brush to ensure coverage. Care should be taken that the Joint Compound is smooth without excess buildup in the gasket seat or on the spigot ends. Coating of the gasket seat and spigot ends shall be performed after the application of the lining.

6. Number of Coats: The number of coats of lining material applied shall be as recommended by the lining manufacturer. However, in no case shall this material be applied above the dry thickness per coat recommended by the lining manufacturer in printed literature. The maximum or minimum time between coats shall be that time recommended by the lining material manufacturer. To prevent delamination between coats, no material shall be used for lining which is not indefinitely recoatable with itself without roughening of the surface.

7. Touch-Up and Repair: Protecto Joint Compound shall be used for touch-up or

repair in accordance with manufacturer's recommendations.

8. Lining Holiday Test: At the manufacturer's facility, the lining shall be tested over 100% of the pipe barrel surface with a high-voltage spark tester as recommended by ASTM Designation G-62 Method B. If holidays are found in the lining by the above test at the manufacturing plant, the holiday shall be repaired per the lining manufacturer's recommendation. The holiday detector shall be a commercially available detector available from holiday detection equipment manufacturers such as SPY, TINKER AND RASOR, and ZORELCO.

9. All pipe linings shall be checked for thickness using a magnetic film thickness gauge. Thickness testing shall be performed in accordance with SSPC-PA-2.

10. Each pipe joint and fitting shall be marked with the date of application of the lining system and with the numerical sequence of application of that date.

11. Certification: The pipe or fitting manufacturer shall supply a certificate attesting to the fact that the applicator met the requirements of this Specification, and that the material used was as specified.

12. Handling: Protecto 401 lined pipe and fittings shall be handled only from the outside of the pipe and fittings. No forks, chains, straps, hooks, etc., shall be placed inside the pipe and fittings for lifting, positioning, or laying.

G. Acceptance: Acceptance will be on the basis of the Engineer's inspection and the manufacturer's written certification that the pipe was manufactured and tested in accordance with the applicable standards.

2.02 Polyvinyl Chloride (PVC) Gravity Sewer Pipe

A. Acceptability of PVC pipe for gravity sewers is indicated in the following table:

ASTM Standard Minimum Wall Thickness / Pipe Stiffness	Wall Type	Acceptable Manufacturers	≤ 6	8 to 15	18 - 48
ASTM D 3034 SDR 35 12454B	SW	Open	Yes	Yes	No
ASTM F 679 T-1 12454C	SW	Open	No	No	Yes

SW Solid Wall

B. All pipe shall have a minimum pipe stiffness of 46 psi at five percent deflection as determined by ASTM D 2412.

C. PVC gravity sewer pipe shall be supplied in lengths not longer than 14 feet.

D. Fittings

1. Fittings 15 inches in diameter and less shall be manufactured in accordance with ASTM D 3034. PVC compound shall be 12454B or 12454C as specified in ASTM D 1784.

a. For sizes 8-inches and less in diameter, fittings shall be molded in one-piece with no solvent welded joints. Minimum socket depths shall be as specified in ASTM D 3034, Table 2.

b. For sizes 10-inches and larger in diameter, fittings shall be fabricated from pipe conforming to ASTM D 3034 using solvent welding. No field fabrication of fittings will be allowed. All such fabrication shall be performed at the factory and the fittings shall be delivered ready for use.

2. Fittings 18 inches in diameter and larger shall be fabricated from pipe conforming to ASTM F 679 using solvent welding. No field fabrication of fittings will be allowed. All such fabrication shall be performed at the factory and the fittings shall be delivered ready for use.

E. Joints: Joints for pipe and fittings shall be of the integral bell and spigot type with a confined elastomeric gasket having the capability of absorbing expansion and contraction without leakage, when tested in accordance with ASTM D 3212. Gaskets shall meet the requirements of ASTM F 477. The joint system shall be subject to the approval of the Engineer and shall be identical for pipe and fittings.

F. Manhole Connections

Solid Wall and Closed Profile Wall Pipe: The sewer shall be connected to manholes utilizing a standard pipe section.

G. Detection Wire: Provide detection wire over all PVC sewers.

H. Acceptance: Acceptance will be on the basis of the Engineer's inspection and the manufacturer's written certification that the pipe and fittings were manufactured and tested in accordance with the applicable standards.

I. All PVC gravity sewer main and service lines shall be green in color.

2.03 Manholes and Precast Concrete Products

A. Precast Concrete Sections

1. Precast concrete sections shall meet the requirements of ASTM C 478 for round shaped and ASTM C913 for other shaped precast products. The minimum compressive strength of the concrete in precast sections shall be 4,000 psi.

2. The minimum wall thickness shall be one-twelfth of the inside diameter of the base, riser or the largest cone diameter. Additionally, the wall thickness shall be sufficient for the proper installation of the rubber boots.

3. Transition slabs which convert bases larger than four feet in diameter to four foot diameter risers shall be designed by the manhole manufacturer to carry the live and dead loads exerted on the slab.

4. Seal joints between precast sections by means of flexible butyl rubber sealant. Butyl rubber sealants shall meet the requirements of AASHTO M-198. Sealant shall be pre-formed type with a minimum nominal diameter of 1-inch. Butyl rubber sealant shall be equal to Kent Seal No. 2 or Concrete Sealants CS202.

B. Brick and Mortar: Brick shall be whole and hardburned, conforming to ASTM C 32 Grade MS. Mortar shall be made of one part Portland cement and two parts clean sharp sand. Cement shall be Type 1 and shall conform to ASTM C 150. Sand shall meet ASTM C 144.

C. Iron Castings

1. Cast iron manhole frames, covers and steps shall meet the requirements of ASTM A 48 for Class 30 gray iron and all applicable local standards. All castings shall be tough, close grained, smooth and free from blow holes, blisters, shrinkage, strains, cracks, cold shots and other imperfections. No casting will be accepted which weighs less than 95 percent of the design weight. Shop drawings must indicate the design weight and provide sufficient dimensions to permit checking. All castings shall be thoroughly cleaned in the shop and given two coats of approved bituminous paint before rusting begins.

2. Manhole frames and covers shall have a minimum 24-inch clear opening and shall be equal to the following:

Type	Design Weight	Manufacturer's Reference
Standard & Traffic	340#	Bouchard 1155
Watertight	530#	Bouchard 1123

3. All frames and covers shall have machined horizontal bearing surfaces.

4. All manholes shall have standard frames and covers except where specifically shown otherwise on the Drawings.

5. Watertight covers shall be bolt-down type and shall be equipped with four 1/2-inch stainless steel bolts and a rubber O-ring gasket. Covers shall be rotatable and interchangeable. Bolt holes shall be bored through so that debris entering the bolt hole will fall into the manhole. Bolt holes shall have the full 360 degree circle within the cover's radius when bored through the cover.

D. Plastic Steps: Manhole steps of polypropylene molded around a steel rod equal to products of M.A. Industries shall be used.

E. Rubber Boots: Provide preformed rubber boots and fasteners equal to those manufactured by Kor-N-Seal or Press Seal Gasket Corporation.

2.04 Miscellaneous Accessories

A. Flexible Adaptor Couplings

1. Couplings for pipe sizes 15-inches in diameter and less shall be elastomeric plastic sleeves designed to connect pipes of dissimilar materials. Adaptors shall provide a positive seal against infiltration and exfiltration and remain leakproof and rootproof up to 4.3 psi. The adaptor manufacturer shall provide all stainless steel clamps and required accessories.

2. Couplings shall be products of Fernco and shall be installed in accordance with the manufacturer's recommendations.

B. Flexible Adaptor Donuts

1. Adaptor donuts shall be elastomeric polyvinyl chloride (PVC), compressible seals designed for sealing joints between sewer pipes of different sizes and/or dissimilar materials. Adaptors shall provide a positive seal against infiltration and exfiltration and remain leakproof and rootproof up to 4.3 psi.

2. Donuts shall be products of Fernco and shall be installed in accordance with the manufacturer's recommendations.

C. Detection Wire: Detection wire shall be 12 gauge THHN (Thermo High Heat Nylon) copper locator wire.

D. Detection Tape: Detection tape shall be composed of a solid aluminum foil encased in a protective plastic jacket. Tapes shall be color coded in accordance with APWA color codes with the following legends: Sanitary Sewerage Systems, Safety Green, “Caution: Sewer Line Buried Below”. Colors may be solid or striped. Tape shall be permanently printed with no surface printing allowed. Tape width shall be minimum 2 inches when buried less than 10 inches below the surface. Tape width shall be minimum 3 inches when buried greater than 10 inches and less than 20 inches. Detection tape shall be equal to Lineguard Type III Detectable or Allen Systems Detectatape.

E. Meter Boxes: For service connections and flushing sections

1. Plastic meter boxes shall be Carson Industries Model BC1015-18.

2. Meter boxes shall be fitted with lockable cast iron covers labeled “SEWER”.

F. Traffic Area Clean-Outs: Cleanouts in traffic areas shall be protected by a cast iron

frame and cover, Neenah model R-1975 with reader lid labeled “SEWER”.

G. Grease Interceptors

Grease Interceptors shall be required for all proposed and newly remodeled facilities involved in food service activities. Product and installation requirements shall be in accordance with the City’s Grease Management Program.

2.05 Concrete

Concrete shall have a compressive strength of not less than 3000 psi, with not less than 5.5 bags of cement per cubic yard and a slump between 3 and 5-inches. For job mixed concrete, submit the concrete mix design for approval by the Engineer. Ready-mixed concrete shall be mixed and transported in accordance with ASTM C 94. Reinforcing steel shall conform to the requirements of ASTM A 615, Grade 60.

Part 3 Execution

3.01 Existing Utilities and Obstructions

A. The Drawings indicate utilities or obstructions that are known to exist according to the best information available to the Owner. This information is not to be relied upon as being exact or complete. The Contractor shall call the Tennessee One Call System, Inc. (811 or 1-800-351-1111) as required by the Tennessee Law "Underground Utility Damage Prevention Act" (Code Section 65-31-106). Additionally, the Contractor shall call the utility companies to request a field location of their utilities.

B. Existing Utility Location: The following steps shall be exercised to avoid interruption of existing utility service.

1. Provide the required notice to the utility owners and allow them to locate their facilities according to Tennessee law. Field utility locations are valid for only 10 days after original notice. The Contractor shall ensure, at the time of any excavation that a valid utility location exists at the point of excavation.

2. Expose the facility to verify its true location and grade for a distance of at least 200 feet in advance of pipeline construction to verify its true location and grade. Repair, or have repaired, any damage to utilities resulting from locating or exposing their true location.

3. Avoid utility damage and interruption by protecting it with means or methods recommended by the utility owner.

4. Maintain a log identifying when phone calls were made, who was called, area for which utility relocation was requested and work order number issued, if any. The Contractor shall provide the Engineer an updated copy of the log bi-weekly, or more frequently if required.

C. Conflict with Existing Utilities

1. Horizontal Conflict: Horizontal conflict shall be defined as when the actual horizontal separation between a utility, main, or service and the proposed water main does not permit safe installation of the sewer by the use of sheeting, shoring, tieing-back, supporting, or temporarily suspending service of the parallel or crossing facility. The Contractor may change the proposed alignment of the sewer to avoid horizontal conflicts if the new alignment remains within the available right-of-way or easement and complies with regulatory agency requirements after a written request to and subsequent approval by the Engineer. If, in the opinion of the Engineer, the sewer's proposed location cannot be adjusted, thus requiring the relocation of an existing utility, the Owner will direct the Contractor to relocate the utility as part of this Contract, with the costs of such relocation being paid for as part of a change order.

2. Vertical Conflict: Vertical conflict shall be defined as when the actual vertical separation between a utility, main, or service and the proposed sewer does not permit the crossing without immediate or potential future damage to the utility, main, service, or the sewer. The Contractor may change the proposed grade of the sewer to avoid vertical conflicts if the changed grade provides minimum required capacity, maintains adequate cover and complies with regulatory agencies requirements, after written request to and subsequent approval by the Engineer. If, in the opinion of the Engineer, the sewer's proposed location cannot be adjusted, thus requiring the relocation of an existing utility, the Owner will direct the Contractor to relocate the utility as part of this Contract, with the costs of such relocation being paid for as part of a change order.

D. Electronic Locator: Have available at all times an electronic pipe locator and a magnetic locator, in good working order, to aid in locating existing pipe lines or other obstructions.

E. Water and Sewer Separation

1. Sewers should maintain a minimum 10 foot edge-to-edge separation from water mains. Where the sewer crosses a water main, an 18-inch vertical separation shall be maintained where possible. Where possible, a full joint of sewer pipe shall be centered over the water main. Any deviation shall be requested in writing to the Engineer.

2. Where the sewer crosses over a water main, the water main shall be encased in concrete to the first joint in each direction.

3. No water main shall be permitted to pass through or come in contact with any part of a manhole.

3.02 Construction Along Highways, Streets and Roadways

A. Install pipe lines and appurtenances along highways, streets and roadways in accordance with the applicable regulations of, and permits issued by, the Department of Transportation and the county with reference to construction operations, safety,

traffic control, road maintenance and repair.

B. Traffic Control

1. The Contractor shall: provide, erect and maintain all necessary barricades; suitable and sufficient lights and other traffic control devices; provide qualified flagmen where necessary to direct traffic; take all necessary precautions for the protection of the work and the safety of the public.

2. Construction traffic control devices and their installation shall be in accordance with the current Manual On Uniform Traffic Control Devices for Streets and Highways.

3. Placement and removal of construction traffic control devices shall be coordinated with the Department of Transportation and the county a minimum of 48 hours in advance of the activity.

4. Placement of construction traffic control devices shall be scheduled ahead of associated construction activities. Construction time in street right-of-way shall be conducted to minimize the length of time traffic is disrupted. Construction traffic control devices shall be removed immediately following their useful purpose. Traffic control devices used intermittently, such as "Flagmen Ahead", shall be removed and replaced when needed.

5. Existing traffic control devices within the construction work zone shall be protected from damage. Traffic control devices requiring temporary relocation shall be located as near as possible to their original vertical and horizontal locations. Original locations shall be measured from reference points and recorded in a log prior to relocation. Temporary locations shall provide the same visibility to affected traffic as the original location. Relocated traffic control devices shall be reinstalled in their original locations as soon as practical following construction.

6. Construction traffic control devices shall be maintained in good repair, and shall be clean and visible to affected traffic for daytime and nighttime operation. Traffic control devices affected by the construction work zone shall be inspected daily.

7. Construction warning signs shall be black legend on an orange background. Regulatory signs shall be black legend on a white background. Construction sign panels shall meet the minimum reflective requirements of the Department of Transportation and the county. Sign panels shall be of durable materials capable of maintaining their color, reflective character and legibility during the period of construction.

8. Channelization devices shall be positioned preceding an obstruction at a taper length as required by the current Manual On Uniform Traffic Control Devices for Streets and Highways, as appropriate for the speed limit at that location. Channelization devices shall be patrolled to insure that they are maintained in the proper position throughout their period of use.

C. Construction Operations

1. Perform all work along highways, streets and roadways to minimize interference with traffic.

2. Stripping: Where the pipe line is laid along road right-of-way, strip and stockpile all sod, topsoil and other material suitable for right-of-way restoration.

3. Trenching, Laying and Backfilling: Do not open the trench any further ahead of pipe laying operations than is necessary. Backfill and remove excess material immediately behind laying operations. Complete excavation and backfill for any portion of the trench in the same day.

4. Shaping: Reshape damaged slopes, side ditches, and ditch lines immediately after completing backfilling operations. Replace topsoil, sod and any other materials removed from shoulders.

D. Excavated Materials: Do not place excavated material along highways, streets and roadways in a manner which obstructs traffic. Sweep all scattered excavated material off the pavement in a timely manner.

E. Drainage Structures: Keep all side ditches, culverts, cross drains, and other drainage structures clear of excavated material. Care shall be taken to provide positive drainage to avoid ponding or concentration of runoff.

F. Landscaping Features: Landscaping features shall include, but are not necessarily limited to: fences; property corners; cultivated trees and shrubbery; manmade improvements; subdivision and other signs within the right-of-way and easement. The Contractor shall take extreme care in moving landscape features and promptly re-establishing these features.

G. Maintaining Highways, Streets, Roadways and Driveways

1. Maintain streets, highways, roadways and driveways in suitable condition for movement of traffic until completion and final acceptance of the work.

2. During the time period between pavement removal and completing permanent pavement replacement, maintain highways, streets and roadways by the use of steel running plates. The edges of running plates shall have asphalt placed around their periphery to minimize vehicular impact. The backfill above the pipe shall be compacted, as specified elsewhere up to the existing pavement surface to provide support for the steel running plates.

3. Furnish a road grader or front-end loader for maintaining highways, streets, and roadways. Make the grader or front-end loader available at all times.

4. Immediately repair all driveways that are cut or damaged. Maintain them in a suitable condition for use until completion and final acceptance of the work.

3.03 Pipe Distribution

A. Pipe shall be distributed and placed in such a manner that will not interfere with traffic.

B. No pipe shall be strung further along the route than 1,000 feet beyond the area in which the Contractor is actually working without written permission from the Owner. The Owner reserves the right to reduce this distance to a maximum distance of 200 feet in residential and commercial areas based on the effects of the distribution to the adjacent property owners.

C. No street or roadway may be closed for unloading of pipe without first obtaining permission from the proper authorities. The Contractor shall furnish and maintain proper warning signs and obstruction lights for the protection of traffic along highways, streets and roadways upon which pipe is distributed.

D. No distributed pipe shall be placed inside drainage ditches.

E. Distributed pipe shall be placed as far as possible from the roadway pavement, but no closer than five feet from the roadway pavement, as measured edge-to-edge.

3.04 Location and Grade

A. The Drawings show the alignment and grade of the sewer and the position of manholes and other appurtenances. The slope shown on the profile and/or called for in the Specifications is the slope of the invert of the pipe.

B. After the Contractor locates and marks the manhole centerlines or baselines of the sewer, the Contractor shall perform clearing and grubbing.

3.05 Laying and Jointing Pipe and Accessories

A. Lay all pipe and fittings to accurately conform to the lines and grades established by the Engineer.

B. Pipe Installation

1. Proper implements, tools and facilities shall be provided for the safe performance of the Work. All pipe, fittings and valves shall be lowered carefully into the trench by means of slings, ropes or other suitable tools or equipment in such a manner as to prevent damage to sewer materials and protective coatings and linings. Under no circumstances shall sewer materials be dropped or dumped into the trench.

2. All pipe, fittings, valves and other appurtenances shall be examined carefully for damage and other defects immediately before installation. Defective materials shall be marked and held for inspection by the Engineer, who may prescribe corrective repairs or reject the materials.

3. All lumps, blisters and excess coating shall be removed from the socket and

plain ends of each pipe, and the outside of the plain end and the inside of the bell shall be wiped clean and dry and free from dirt, sand, grit or any foreign materials before the pipe is laid. No pipe which contains dirt shall be laid.

4. Foreign material shall be prevented from entering the pipe while it is being placed in the trench. No debris, tools, clothing or other materials shall be placed in the pipe at any time.

5. As each length of pipe is placed in the trench, the joint shall be assembled and the pipe brought to correct line and grade. The pipe shall be secured in place with approved backfill material.

6. It is common practice to lay pipe with the bells facing the direction in which work is progressing.

7. Applying pressure to the top of the pipe, such as with a backhoe bucket, to lower the pipe to the proper elevation or grade shall not be permitted.

8. Polyethylene Encasement: Installation shall be in accordance with AWWA C105 and the manufacturer's instructions. All ends shall be securely closed with tape and all damaged areas shall be completely repaired to the satisfaction of the Engineer.

C. Alignment and Gradient

1. Lay pipe straight in alignment and gradient or follow true curves, where shown on the Drawings, as nearly as practicable. Do not deflect any joint more than the maximum deflection recommended by the manufacturer.

2. Maintain a transit, level and accessories on the job to lay out angles and ensure that deflection allowances are not exceeded.

3. The Contractor shall check the invert elevation at each manhole and the pipe invert elevation at least three times daily, start, mid-day and end of day. Elevations shall be checked more frequently if more than 100 feet of pipe is installed in a day or if the pipe is being constructed at minimum slope.

4. The Contractor shall check the horizontal alignment of the sewer at the same schedule as for invert elevations.

D. Expediting of Work: Excavate, lay the pipe, and backfill as closely together as possible. Do not leave unjointed pipe in the trench overnight. Backfill and compact the trench as soon as possible after laying and jointing is completed. Cover the exposed end of the installed pipe each day at the close of work and at all other times when work is not in progress. If necessary to backfill over the end of an uncompleted pipe or accessory, close the end with a suitable plug, either push-on, mechanical joint, restrained joint or as approved by the Engineer.

E. Joint Assembly: Push-on, mechanical, flange and restrained type joints shall be assembled in accordance with the manufacturer's recommendations.

F. Cutting Pipe

1. Cut ductile iron pipe using an abrasive wheel saw.

2. Cut PVC pipe using a suitable saw.

3. Remove all burrs and smooth the end before jointing.

4. The Contractor shall cut the pipe and bevel the end, as necessary, to provide the correct length of pipe necessary for installing the fittings, valves, accessories and closure pieces in the correct location. Only push-on or mechanical joint pipe shall be cut.

G. House Connections: Install long radius bends or tees in locations designated by the Engineer for future connection of service lines. Install the appropriate length of pipe necessary to reach the property line. Clean out assembly and cap the end of the pipe with a Fernco Cap and mark the end of the service with approved material by the Engineer. Record the location of fittings installed on a copy of the Contract Drawings to be submitted as “As-Builts”.

3.06 Manhole and Precast Concrete Product Construction

A. Construct manholes as shown on the Drawings.

B. Precast Concrete: Handle sections carefully to prevent cracking or chipping. Provide uniform bedding of the bottom section to prevent uneven loading. Install gaskets and joint sealants in accordance with manufacturer's recommendations to produce a watertight structure.

C. Pipe Connections: All pipes shall be connected to precast concrete manholes by a rubber boot provided in a cored or precast hole of the proper diameter.

D. Inverts: Form channels as shown on the Drawings, rounded, and troweled smooth. Maintain consistent grade through the invert.

E. Top Elevations: Build manholes outside of paved areas to 18-inches above finished grade unless otherwise shown on the Drawings or directed by the Engineer. Build manholes in paved areas to existing grades.

F. Drop Connections: Manholes requiring drop connections are shown on the Drawings. Construct drop connections of the same materials as the upstream sewer and in accordance with the details shown on the Drawings.

G. Frames and Covers: Unless frame and cover is at grade, the frame shall be cast into the cone section.

H. Seal all manhole joints and lift holes, both inside and out, with grout. Between precast sections, this is in addition to joint sealant.

I. Invert Elevations: The invert elevations shown on the Drawings shall be for the invert at the centerline of the precast concrete manhole. Prior to setting the laser or other vertical alignment control system for the sewer upstream of the manhole, the Contractor shall verify the elevation of the sewer installed at the manhole. Should the elevation differ from that shown on the Drawings, the Contractor shall take the following corrective action:

1. If the sewer is laid at negative grade, the Contractor shall remove and reinstall the sewer at the correct grade at no additional cost to the Owner.

2. If the sewer is laid at a grade less than that shown on the Drawings, thus reducing the sewer's capacity, the Owner may require the sewer to be removed and relaid at the correct grade at no additional cost to the Owner. As a minimum, the grade to the next upstream manhole shall be adjusted such that the next upstream manhole shall be set at the correct elevation.

3. If the sewer is laid at a grade greater than that shown on the Drawings, and if the Contractor can show that there are no conflicts with upstream existing utilities or obstructions, the Contractor shall adjust the grade of the next upstream manhole such that the next upstream manhole shall be set at the correct elevation. If such an adjustment, in the Engineer's opinion, is substantial, the grade adjustment shall be spread over multiple sections of the sewer. If such an adjustment, in the Owner's opinion, significantly reduces the sewer's capacity, the Owner may require the Contractor to remove and relay that portion of the sewer laid at the improper grade.

J. Manholes shall be constructed such that their walls are plumb.

3.07 Inspection and Testing

A. Clean and test lines before requesting final acceptance. Where any obstruction is met, clean the sewers by means of rods, swabs, or other instruments. When requested by the Engineer, flush out lines and manholes before final inspection.

B. Gravity Sewers: Pipe lines shall be straight and show a uniform grade between manholes. Correct any discrepancies discovered during inspection. Unless otherwise instructed by the Engineer or Owner, low pressure air shall be used to test lines.

1. Infiltration Tests:

a. Install suitable weirs in manholes selected by the Engineer to determine the leakage of ground water into the sewer. The maximum length of line for each infiltration test shall be 5,000 feet. Measure leakage only when all visible leaks have been repaired and the ground water is two feet above the top of the pipe. If leakage in any section of the sewer line exceeds 25 gpd/inch diameter/mile, locate and repair leaks. Repair methods must be approved by the Engineer. After repairs are completed, re-test for leakage.

b. Furnish, install, and remove the necessary weirs, plugs, and bulkheads required to perform the leakage tests. Where continuous monitoring of flow level is required, the Owner will provide and operate monitoring equipment.

2. Exfiltration Tests:

a. Low Pressure Air Test:

i. Prior to air testing, the section of sewer between manholes shall be thoroughly cleaned and wetted. Immediately after cleaning or while the pipe is water soaked, the sewer shall be tested with low-pressure air. At the Contractor's option, sewers may be tested in lengths between manholes or in short sections (25 feet or less) using inflatable balls pulled through the line from manhole to manhole. Air shall be slowly supplied to the plugged sewer section until internal air pressure reaches approximately 4.0 psi. After this pressure is reached and the pressure allowed to stabilize (approximately two to five minutes), the pressure may be reduced to 3.5 psi before starting the test. If a 1.0 psi drop does not occur within the test time, then the line has passed the test. If the pressure drops more than 1.0 psi during the test time, the line is presumed to have failed the test, and the Contractor will be required to locate the failure, make necessary repairs, and retest the line. Minimum test time for various pipe sizes is as follows:

Nominal Pipe Size, inches	T (Time Min/100) Feet	
	VCP, RCP [1]	DIP, PVC [2]
6	0.7	5.7
8	1.2	7.6
10	1.5	9.4
12	1.8	11.3
15	2.1	14.2
18	2.4	17.0
21	3.0	19.8
24	3.6	22.8

[1] Source: ASTM C828 and ASTM C924
[2] Source: ASTM F1417

ii. Required test equipment, including inflatable balls, braces, air hose, air source, timer, rotometer as applicable, cut-off valves, pressure reducing valve, 0-15 psi pressure gauge, 0-5 psi pressure gauge

with gradations in 0.1 psi and accuracy of ± two percent, shall be provided by the Contractor.

iii. The Contractor shall keep records of all tests made. Copy of such records will be given to the Engineer or the Owner. Such records shall show date, line number and stations, operator, and such other pertinent information as required by the Engineer.

iv. The Contractor is cautioned to observe proper safety precautions in performance of the air testing. It is imperative that plugs be properly secured and that care be exercised in their removal. Every precaution shall be taken to avoid the possibility of over-pressurizing the sewer line.

b. Hydrostatic Test:

i. Test pipe between manholes with a minimum of 10 feet hydrostatic pressure, measured at the center of the pipe at the upstream manhole.

ii. The ends of the pipe in the test section shall be closed with suitable watertight bulkheads. Inserted into the top of each bulkhead shall be a 2-inch pipe nipple with an elbow. At the upper end of the test section, a 12-inch riser pipe shall be connected to the 2-inch nipple. The test section of pipe shall be filled through the pipe connection in the lower bulkhead which shall be fitted with a valve, until all air is exhausted and until water overflows the riser pipe at the upper end. Water may be introduced into the pipe 24 hours prior to the test period to allow complete saturation. House service lines, if installed, shall also be fitted with suitable bulkheads having provisions for the release of air while the test section is being filled with water.

iii. During the test period, which shall extend over a period of two hours, water shall be introduced into the riser pipe from measured containers at such intervals as are necessary to maintain the water level at the top of the riser pipe. The total volume of water added during the test period shall not exceed that specified for infiltration.

3. PVC Deflection Test:

a. Test PVC gravity sewer for excessive deflection by passing a "pig" through the line with a diameter equal to 95 percent of the nominal inside diameter of the pipe. Deflection of the pipe shall not exceed the following:

Nominal Pipe Diameter	Maximum Allowable Deflection
≤ 12-inches	5%
15 to 30-inches	4%

Nominal Pipe Diameter	Maximum Allowable Deflection
> 30-inches	3%

b. Excavate and install properly any section of pipe not passing this test. Re-test until results are satisfactory. This test shall be performed within the first 30 days of installation and during final inspection, at the completion of this contract.

C. Manholes: Prior to testing manholes for watertightness, all liftholes shall be plugged with a non-shrink grout, all joints between precast sections shall be properly sealed and all pipe openings shall be temporarily plugged and properly braced. Each manhole shall pass vacuum testing. The manhole, after proper preparation as noted above, shall be vacuum tested prior to backfilling. The test head shall be placed at the inside of the top of the cone section and the compression head inflated to 40 psi to effect a seal between the vacuum base and the manhole structure. Connect the vacuum pump to the outlet port with the valve open. A vacuum of 10-inches of mercury shall be drawn and the vacuum pump shut off. With the valves closed, the time shall be measured for the vacuum to drop to 9-inches. The manhole shall pass if the time is greater than that specified in the Table below. If the manhole fails the initial test, necessary repairs shall be made with non-shrink grout while the vacuum is still being drawn. Retesting shall proceed until a satisfactory test is obtained.

Depth of Manhole	Min Test Time
0 - 8	1:00
8 – 10	1:15
10 – 12	1:30
12 – 14	1:45
14 – 16	2:00
Each additional 2 feet	Add 0:15

3.08 Protection and Restoration of Work Area

A. General: Return all items and all areas disturbed, directly or indirectly by work under these Specifications, to their original condition or better, as quickly as possible after work is started.

1. The Contractor shall plan, coordinate, and prosecute the work such that disruption to personal property and business is held to a practical minimum.

2. All construction areas abutting lawns and yards of residential or commercial property shall be restored promptly. Backfilling of underground facilities, ditches, and disturbed areas shall be accomplished on a daily basis as work is completed. Finishing, dressing, and grassing shall be accomplished immediately thereafter, as a continuous operation within each area being constructed and with emphasis placed on completing each individual yard or business frontage. Care shall be taken to provide positive drainage to avoid ponding or concentration of runoff.

3. Handwork, including raking and smoothing, shall be required to ensure that the removal of roots, sticks, rocks, and other debris is removed in order to provide a neat and pleasing appearance.

4. The Department of Transportation's engineer shall be authorized to stop all work by the Contractor when restoration and cleanup are unsatisfactory and to require appropriate remedial measures.

B. Man-Made Improvements: Protect, or remove and replace with the Engineer's approval, all fences, walkways, mail boxes, pipe lines, drain culverts, power and telephone lines and cables, property pins and other improvements that may be encountered in the work.

C. Cultivated Growth: Do not disturb cultivated trees or shrubbery unless approved by the Engineer. Any such trees or shrubbery which must be removed shall be heeled in and replanted under the direction of an experienced nurseryman.

D. Cutting of Trees: Do not cut trees for the performance of the work except as absolutely necessary. Protect trees that remain in the vicinity of the work from damage from equipment. Do not store spoil from excavation against the trunks. Remove excavated material stored over the root system of trees within 30 days to allow proper natural watering of the root system. Repair any damaged tree over 3-inches in diameter, not to be removed, under the direction of an experienced nurseryman. All trees and brush that require removal shall be promptly and completely removed from the work area and disposed of by the Contractor. No stumps, wood piles, or trash piles will be permitted on the work site.

E. Disposal of Rubbish: Dispose of all materials cleared and grubbed during the construction of the project in accordance with the applicable codes and rules of the appropriate county, state and federal regulatory agencies.

END OF SECTION

Part 1 General

1.01 Scope

A. This Section describes products to be incorporated into force mains, pressure sewers, pressure sewer services, gravity sewer services and individual pressure systems and accessories and requirements for the installation and use of these items. Furnish all products and perform all labor necessary to fulfill the requirements of these Specifications.

B. General: Supply all products and perform all work in accordance with applicable American Society for Testing and Material (ASTM), American Water Works Association (AWWA), American National Standards Institute (ANSI), or other recognized standards. Latest revisions of all standards are applicable.

1.02 Qualifications

If requested by the Engineer, submit evidence that manufacturers have consistently produced products of satisfactory quality and performance for a period of at least two years.

1.03 Submittals

Complete shop drawings and engineering data for all products shall be submitted to the Engineer a minimum of five working days prior to the pre-construction conference. A minimum of six full sets of manufacturer's data calling out make, model numbers, sizes, and intended applications for the materials shall be delivered to the City of Portland for approval. An approved set of submittals will be returned to the Contractor and developer, if requested, at or prior to the pre-construction conference.

1.04 Transportation and Handling

Handling Materials

1. Unloading: Furnish equipment and facilities for unloading, handling, distributing and storing pipe, fittings, valves and accessories. Make equipment available at all times for use in unloading. Do not drop or dump materials. Any materials dropped or dumped will be subject to rejection without additional justification. Pipe handled on skids shall not be rolled or skidded against the pipe on the ground.

2. Handling: Handle pipe, fittings, valves and accessories carefully to prevent shock or damage. Handle pipe by rolling on skids, forklift, or front end loader. Do not use material damaged in handling. Slings, hooks or pipe tongs shall be padded and used in such a manner as to prevent damage to the exterior coatings or internal lining of the pipe.

3. Lined pipe shall be handled and transported to prevent damage to linings.

1.05 Storage and Protection

A. Store all pipe which cannot be distributed along the route. Make arrangements for the use of suitable storage areas.

B. Stored materials shall be kept safe from damage. The interior of all pipe, fittings and other appurtenances shall be kept free from dirt or foreign matter at all times. Valves shall be drained and stored in a manner that will protect them from damage by freezing.

C. Pipe shall not be stacked higher than the limits recommended by the manufacturer. The bottom tier shall be kept off the ground on timbers, rails or concrete. Pipe in tiers shall be alternated: bell, plain end; bell, plain end. At least two rows of timbers shall be placed between tiers and chocks, affixed to each other in order to prevent movement. The timbers shall be large enough to prevent contact between the pipe in adjacent tiers.

D. Store joint gaskets in a cool location, out of direct sunlight. Gaskets shall not come in contact with petroleum products. Gaskets shall be used on a first-in, first-out basis.

1.06 Quality Assurance

A. Product manufacturers shall provide the Engineer with written certification that all products furnished comply with all applicable provisions of these Specifications.

B. If ordered by the Engineer, each pipe manufacturer shall furnish the services of a competent factory representative to supervise and/or inspect the installation of pipe. This service will be furnished for a minimum of five days during initial pipe installation.

Part 2 Products

2.01 Ductile Iron Pipe (Dip)

A. Ductile Iron Pipe (DIP)

Ductile iron pipe shall be manufactured in accordance with AWWA C151. All pipe, except specials, shall be furnished in nominal lengths of 18 to 20 feet. Sizes will be as shown on the Drawings. All pipe shall have a minimum pressure rating as indicated in the following table, and corresponding minimum wall thickness, unless otherwise specified or shown on the Drawings:

Pipe Sizes (inches)	Pressure Class (psi)
4 - 12	350
16 - 24	250

B. Fittings and Accessories

1. Fittings shall be ductile iron mechanical joint and shall conform to AWWA C110/ANSI A21.10 or AWWA C153/ANSI A21.53 with a minimum rated working pressure of 250 psi.

2. Thrust Collars: Thrust collars shall be welded-on ductile iron body type capable of withstanding a thrust due to 250 psi internal pressure on a dead end from either direction on that pipe size. Weld-on collars shall be continuously welded to the pipe by the pipe manufacturer. Retainer glands may be used for thrust collars where shown on the Drawings and as specified in this Section.

3. Solid Sleeves: Solid sleeves shall permit the connection of plain end ductile iron pipe and plain end PVC pipe. Solid sleeves shall meet the requirements of ANSI/AWWA C110 for long pattern and have a minimum pressure rating of 250 psi. Solid sleeves shall have a mechanical or restrained joint as specified in this Section and as shown on the Drawings. Solid sleeves shall be provided with gaskets suitable for the type of pipe to be connected. Solid sleeves shall be used only in locations shown on the Drawings or at the direction of the Engineer. Solid sleeves shall be manufactured by ACIPCO, U.S. Pipe or McWane (Clow).

C. Joints for Ductile Iron Pipe and Fittings

1. General

a. Joints for ductile iron pipe and fittings shall be mechanical joint, flanged joint, restrained joint, push-on joint or as shown on the Drawings or specified herein.

b. Unless otherwise shown on the Drawings, specified or directed, all ductile iron pipe laid underground shall be joined using push-on type joints. All fittings shall be mechanical joint.

c. In all cases, gaskets shall be made of material that will not be damaged by the fluid being transported nor by the environment in which the pipe is installed.

d. Provide the necessary bolts for connections. All bolts and nuts shall be threaded in accordance with ANSI B1.1, Coarse Thread Series, Class 2A external and 2B internal fit. All bolts and nuts shall be made in the U.S.A.

2. Push-On Joints: Push-on joints and gaskets shall conform to AWWA C111/ANSI A21.11. Details of the joint design shall be in accordance with the manufacturer's standard practice such as ACIPCO "Fastite", McWane (Clow) "Bell-Tite", or U.S. Pipe "Tyton" joints.

3. Restrained Joints

a. Restrained joints shall be ACIPCO "FLEX-RING" or "FAST-GRIP" or U.S. "TR-FLEX" or "FIELD LOK".

b. Bolts and nuts shall be in accordance with the manufacturer's recommendations.

c. Gaskets shall be in accordance with the manufacturer's recommendations.

D. Cement Linings: Pipe and fittings shall be cement lined in accordance with AWWA C104/ ANSI/AWWA C104/A21.4.

2.02 Polyvinyl Chloride (PVC) Pipe

A. 2-Inches in Diameter and Larger

1. Pipe: PVC pipe shall conform to ASTM D 2241. The pipe shall have a Standard Dimensional Rating (SDR) of 21. PVC pipe shall be the color green. PVC pressure pipe shall be supplied in 20 foot nominal lengths.

2. Fittings

a. 4-Inches in Diameter and Greater: All fittings shall be of ductile iron meeting the requirements of AWWA C110/ANSI A21.10 or AWWA C153/ANSI A21.53 with a minimum rated working pressure of 250 psi. Fittings shall be cement lined in accordance with AWWA C104/ANSI A21.4. Fittings shall be mechanical joint. Fittings shall be furnished with a bituminous outside coating. Special adapters shall be provided, as recommended by the manufacturer, to adapt the PVC pipe to mechanical jointing with cast or ductile iron pipe, fittings or valves.

b. Less Than 4-Inches in Diameter: Fittings shall be of the same material, strength and dimension as the pipe to which it connects.

3. Joints: Pipe and fittings 2-inches in diameter and greater shall have integral bell and spigot type joints with elastomeric gaskets having the capability of absorbing expansion and contraction without leakage. Joints shall meet the requirements of ASTM D 3139; gaskets shall meet the requirements of ASTM F 477. Joint system shall be subject to the approval of the Engineer.

4. Acceptance: Acceptance will be on the basis of the Engineer's inspection and the manufacturer's written certification that the pipe was manufactured and tested in accordance with the applicable standards.

B. Less than 2-Inches in Diameter

1. Pipe: Schedule 40 in accordance with ASTM D 1785.

2. Fittings: Solvent weld socket type, same schedule as piping, ASTM D 2466 or D 2467.

3. Solvent Cement: ASTM D 2564.

C. C900 Pipe:

1. Where shown on the Drawings, PVC pipe shall have belled ends for push-on type jointing and shall conform to AWWA C900, ductile iron pipe equivalent outside diameters. The pipe shall have a Dimension Ratio (DR) of 14 and shall be capable of withstanding a working pressure of 200 psi. Pipe shall be supplied in minimum lengths of 20 feet.

2. All fittings shall be of cast or ductile iron meeting the requirements of AWWA C110 or AWWA C153 with a minimum rated working pressure of 250 psi. Fittings shall be cement lined in accordance with AWWA C104. Fittings shall be furnished with a bituminous outside coating. Special adapters shall be provided, as recommended by the manufacturer, to adapt the PVC pipe to mechanical jointing with cast or ductile iron pipe, fittings or valves.

3. Where shown on Drawings or where specified, fittings shall be lined with ceramic epoxy as specified in Section 33 30 00.

2.03 Manholes and Precast Concrete Products

A. Precast Concrete Sections

1. Precast concrete sections shall meet the requirements of ASTM C 478. The minimum compressive strength of the concrete in precast sections shall be 4,000 psi.

2. The minimum wall thickness shall be one-twelfth of the inside diameter of the base, riser or the largest cone diameter. Additionally, the wall thickness shall be sufficient for the proper installation of the rubber boots.

3. Transition slabs which convert bases larger than four feet in diameter to four foot diameter risers shall be designed by the manhole manufacturer to carry the live and dead loads exerted on the slab.

4. Seal joints between precast sections by means of rubber O-ring gaskets or flexible butyl rubber sealant. Butyl rubber sealants shall meet the requirements of AASHTO M-198. Sealant shall be pre-formed type with a minimum nominal diameter of 1-inch. Butyl rubber sealant shall be equal to Kent Seal No. 2 or Concrete Sealants CS202.

B. Brick and Mortar: Brick shall be whole and hardburned, conforming to ASTM C 32 Grade MS. Mortar shall be made of one part Portland cement and two parts clean sharp sand. Cement shall be Type 1 and shall conform to ASTM C 150. Sand shall meet ASTM C 144.

C. Iron Castings

1. Cast iron manhole frames, covers and steps shall meet the requirements of ASTM A 48 for Class 30 gray iron and all applicable local standards. All

castings shall be tough, close grained, smooth and free from blow holes, blisters, shrinkage, strains, cracks, cold shots and other imperfections. No casting will be accepted which weighs less than 95 percent of the design weight. Shop drawings must indicate the design weight and provide sufficient dimensions to permit checking. All castings shall be thoroughly cleaned in the shop and given two coats of approved bituminous paint before rusting begins.

2. Manhole frames and covers shall have a minimum 24-inch clear opening and shall be equal to the following:

Type	Design Weight	Manufacturer's Reference
Standard & Traffic	340#	Bouchard 1155
Watertight	530#	Bouchard 1123

3. All frames and covers shall have machined horizontal bearing surfaces.

4. All manholes shall have standard frames and covers except where specifically shown otherwise on the Drawings.

5. Watertight covers shall be bolt-down type and shall be equipped with four 1/2-inch stainless steel bolts and a rubber O-ring gasket. Covers shall be rotatable and interchangeable. Bolt holes shall be bored through so that debris entering the bolt hole will fall into the manhole. Bolt holes shall have the full 360 degree circle within the cover's radius when bored through the cover.

D. Plastic Steps: Manhole steps of polypropylene molded around a steel rod equal to products of M.A. Industries may be used.

E. Rubber Boots: Provide preformed rubber boots and fasteners equal to those manufactured by Kor-N-Seal or Press Seal Gasket Corporation.

F. Protective Coatings:

1. Precast concrete manholes that receive discharge from sewage pump stations shall be lined with a protective coating.

2. The finished structure shall be corrosion resistant to Hydrogen Sulfide, Sulfuric Acid, Nitric Acid, and Sodium Hydroxide as well as other common substances likely to be found in the collection system.

3. The coating system shall meet the requirements of Section 33 01 30.83 of these Specifications.

2.04 Miscellaneous Accessories

A. Detection Wire: Detection wire shall be 12 gauge THHN (Thermo High Heat Nylon) copper locator wire.

B. Retainer Glands

1. Retainer glands for ductile iron pipe shall be Megalug, Series 1100, as manufactured by EBBA Iron Sales, Inc, or Uni-Flange Series 1400, as manufactured by Ford Meter Box Company.

2. Retainer glands for polyvinyl chloride pipe shall be Megalug Series 2000 PV, as manufactured by EBAA Iron Sales, Inc, or Uni-Flange Series 1300, as manufactured by Ford Meter Box Company.

C. Anchor Couplings: Lengths and sizes shall be as shown on Drawings. Anchor couplings shall be equal to Tyler Pipe 5-198.

D. Meter Box: For service connections and flushing sections.

1. Plastic meter boxes shall be Carson Industries Model BC1015-14.

2. Meter boxes shall be fitted with lockable cast iron covers.

2.05 Concrete

Concrete shall have a compressive strength of not less than 3000 psi, with not less than 5.5 bags of cement per cubic yard and a slump between 3 and 5-inches. For job mixed concrete, submit the concrete mix design for approval by the Engineer. Ready-mixed concrete shall be mixed and transported in accordance with ASTM C 94. Reinforcing steel shall conform to the requirements of ASTM A 615, Grade 60.

2.06 Plug Valves (PV)

A. Valves shall be 90 degree turn, non-lubricated, eccentric type with resilient faced plugs. Design of the valve shall provide that contact between the seat and the plug shall only occur in the final degrees of plug movement. Valves shall be suitable for throttling service and service where valve operation is infrequent.

B. Valves shall provide drip-tight shut-off up to the full pressure rating with pressure in either direction. Pressure ratings shall be established by hydrostatic tests conducted in accordance with ANSI B16.1. Valves shall be rated at a minimum of 150 psi.

C. Valves shall have a port area equal to at least 80 percent of the full pipe area.

D. Bodies shall be cast-iron, conforming to ASTM A 126, Class B (carbon steel for 2-inch valves).

E. Valve ends shall be a mechanical joint type, except where flanged or restrained joint ends are shown on the Drawings. Mechanical joint valves shall have bell ends conforming to applicable requirements of AWWA C111/ANSI A21.11. Flanged joints shall meet the requirements of ANSI B16.1, Class 125. Flanged valves with flange-to-MJ adapters shall not be acceptable in lieu of MJ valves.

F. Valve seats shall be a raised, welded-in overlay of not less than 90 percent pure nickel, machined to mate with the resilient faced plug. Overlay shall be minimum of 1/8-inch thick.

G. The plug shall be of semi-steel, conforming to ASTM A 126, Class B. The plug facing shall be a synthetic rubber compound of approximately 70 durometer hardness bonded to the plug. Facing material shall be abrasion resistant and suitable for service in sewage and sludge applications.

H. Valves shall be furnished with replaceable, sleeve-type bearings in the upper and lower journals. Bearings shall comply with applicable requirements of AWWA C507. Bearing materials shall have a proven record of service of not less than five years.

I. The valve body shall be fitted with a bolted bonnet incorporating a stuffing box and pull-down packing gland. Packing shall be the split chevron type. Design of exposed valves shall allow visible inspection of the shaft seal, adjustment of the packing, and replacement of the packing, all without disturbing the bonnet or valve operator. The shaft seal shall comply with the requirements of AWWA C504.

J. Actuators

1. Valves for exposed service, 3 through 8-inches in diameter, shall be lever operated. Hand levers shall be steel with a non-metallic grip.

2. Actuators for buried service and valves 10-inches and larger, shall be equipped with manual operated geared actuators. Geared actuators shall be totally enclosed, oil lubricated, worm and gear type. Shaft seals shall be provided to prevent entry of dirt and water into the actuator. All shaft bearings shall be permanently lubricated bronze bushings. Actuators shall clearly indicate valve position and an adjustable stop shall be provided to set closing torque. Construction of actuator housing shall be semi-steel. Gear actuators shall comply with requirements of AWWA C504.

3. Gear actuators for buried valves 10-inches and larger in diameter shall be mounted above ground on an extended bonnet.

4. Motorized actuators shall be provided where shown on the Drawings and as specified in this Section.

5. Valves and operators for submerged or buried service shall have seals on all shafts and gaskets on valve operator covers to prevent the entry of water. Operator mounting brackets for submerged service shall be totally enclosed and shall have gasket seals.

K. Operators

1. Valves for non-buried service, six feet or more above the operating floor shall be furnished with a chainwheel operator and chain for operation from floor level. All other valves shall be equipped with a handwheel operator.

2. Valves, 3 through 8-inches, for buried service shall have a nut type operator and shall be equipped with a valve box and stem extension required to bring the operation nut within 6-inches of finished grade. Valve boxes and extension stems shall be as specified in this Section.

L. All exposed bolts, nuts, and washers for buried or submerged valves shall be stainless steel. All exposed nuts, bolts, springs, washers, and miscellaneous hardware shall be zinc coated in accordance with ASTM A 153 unless specified otherwise.

M. The exterior of all buried valves shall have a factory applied, two coat coal tar epoxy coating system. The coal tar epoxy shall be Tnemec Tneme-Tar 46-413, Indurall Ruffstuff 2100 Coal Tar Epoxy or Kop-Coat Bitumastic No. 300-M. Each coating shall have a minimum dry film thickness of 8-10 mils.

N. All ferrous metal interior surfaces of plug valves shall be provided with a factory applied epoxy interior coating conforming to the requirements of AWWA C550. The coating shall be either TNEMEC Series 20 Pota Pox, Valspar Series 78 or Kopcoat Hi Gard Epoxy. Each coating shall have a minimum dry film thickness of 4 to 6 mils.

O. Acceptable Manufacturers: All plug valves shall be products of a single manufacturer who must submit evidence of five years satisfactory service in sewage applications of the same design and of the sizes required. Valves shall be manufactured by DeZurik or Keystone.

2.07 Valves for Service Connections

A. Check Valves: The valve shall be suitable for PVC threaded construction. The valve shall be gravity-operated, flapper-type check valve. This valve will provide a full-ported passageway when open, and shall introduce a friction loss of less than 6-inches of water at maximum rated flow. Working parts shall be made of 300 series stainless steel and fabric-reinforced synthetic elastomer to ensure corrosion resistance, dimensional stability, and fatigue strength. A non-metallic hinge shall be an integral part of the flapper assembly providing a maximum degree of freedom to assure seating even at a very low back pressure. The valve body shall be a high gloss injection molded part made of PVC Type I-II. Check valves shall be furnished with each individual pump station.

B. PVC Ball Valves (PBLV)

Ball valves shall be non-shock thermoplastic of Type 1, Grade 1 PVC with O-ring stem seal and Teflon ball seat. O-ring seals shall be EPDM. Valves shall withstand 150 psi pressure. Valves shall have union connections at each end. Valves shall be Hayward "Safe Block", or Chemtrol TU Series, or Spears (True Union 2000 Industrial).

C. Ball Valves (BLV-BZ)

1. Ball valves shall have a single piece, bronze body construction. Valves shall have threaded ends and lever operator. Ball shall be 316 stainless steel with

TFE seats and packing. Valves shall be pressure rated for 400 psi at 68 degrees F.

2. Valves shall be Apollo Series 70-100, Neles-Jamesbury Series 300, Watts No. B-6400, or Nibco T580.

2.08 Air Valves for Sewerage Service

A. Air Release Valves: Valves shall be automatic air release valves designed to allow escape of air under pressure and close water-tight when liquid enters the valve. Valve shall have a 3/4-inch NPT inlet and a maximum orifice diameter of 1/16-inch. The valve body shall be cast iron, designed to facilitate disassembly for cleaning and maintenance. The float shall be stainless steel; the valve seat and all working parts shall be of corrosion-resistant materials. Valves shall be equipped with the necessary attachments, including valves, quick disconnect couplings and hose, to permit back flushing after installation without dismantling the valve.

B. Air/Vacuum Valves: Valves shall be automatic air and vacuum valves designed to allow escape of air, close water-tight when liquid enters the valve, and allow air to enter in the event of a vacuum. The valve body shall be cast iron, designed to facilitate disassembly for cleaning and maintenance. The float shall be stainless steel; the valve seat and all working parts shall be of corrosion-resistant materials. Valves shall be equipped with the necessary attachments, including valves, quick disconnect couplings and hose, to permit back flushing after installation without dismantling the valve.

C. Combination air valve shall consist of an air release valve tapped into the body of an air and vacuum valve.

D. Single Body Valve: In lieu of C. above, a single body, double orifice, sewage combination valve may be used. Materials of construction, orifice size, venting capacity and accessories shall meet the requirements of A. and B. above.

E. Valves shall be recommended by the manufacturer for wastewater service and shall be equal to APCO Valve Corporation. A.R.I. Flow Control Accessories, or Val-Matic.

2.09 Valve Boxes and Extension Stems

A. Valve Boxes

1. Unless shown otherwise on the Drawings, all valves shall be equipped with valve boxes. The valve boxes shall be cast iron two-piece screw type with drop covers. Valve boxes shall have a 5.25-inch inside diameter. Valve box covers shall weigh a minimum of 13 pounds. The valve boxes shall be adjustable to 6-inches up or down from the nominal required cover over the pipe. Valve boxes shall be of sufficient length that bottom flange of the lower belled portion of the box is below the valve operating nut. Ductile or cast iron extensions shall be provided as necessary. Covers shall have "SEWER" cast into them. Valve boxes shall be manufactured in the United States.

2. Valve boxes shall be manufactured by Bouchard.

B. Extension Stems: Extension stems shall be provided if depth of bury places the operating nut in excess of 60-inches beneath finished grade, so as to set the top of the operating nut 30-inches below finished grade. Connection to the valve shall be with a wrench nut coupling and a set screw to secure the coupling to the valve's operating nut. The coupling and square wrench nut shall be welded to the extension stem. Extension stems shall be equal to Mueller 26441.

2.10 Corporation Cocks and Curb Stops

Corporation cocks and curb stops shall be ground key type, shall be made of bronze conforming to ASTM B 61 or B 62, and shall be suitable for the working pressure of the system. Ends shall be suitable for flared tube compression type joint. Threaded ends for inlet and outlet of corporation cocks shall conform to AWWA C800; coupling nut for connection to flared copper tubing shall conform to ANSI B16.26. Corporation cocks and curb stops shall be manufactured by Mueller or Ford. All corporation stops shall comply with amended Safe Drinking Water Act for lead reduction.

2.11 Simplex Grinder Pump Station

A. The simplex grinder pump station shall include a fiberglass-reinforced polyester tank which shall house a displacement grinder pump, level controls, piping, anti-siphon valve, check valve, wiring, and other miscellaneous appurtenances. The alarm/disconnect panel and 6 conductor, 12 gauge, type SJOW power and alarm cable shall also be supplied as part of the pump station.

B. Alarm/Disconnect Panel

1. The alarm/disconnect panel shall be NEMA 3R, UL listed, thermoplastic enclosure with a hinged, padlockable cover and secured dead front and component knockouts. A visual alarm lamp enclosed within a red fluted lens at least 2-5/8-inches in diameter and 1-11/16-inches in height shall be mounted on top of the panel in such a manner as to maintain a NEMA 3R rating. An audible alarm, capable of being deactivated by depressing a push-type switch, encapsulated in a weatherproof silicone boot, shall be mounted on the bottom of the enclosure.

2. The panel shall contain one 15 amp, double pole circuit breaker for the power circuit and one 15 amp single pole circuit breaker for the alarm circuit. The panel shall contain terminal blocks, integral power bus, and a complete alarm feature.

3. Additional features shall include an audible and visual alarm, push-to-run switch, and high level (redundant) pump starting control.

4. Alarm Sequence

a. Wastewater in wet well rising above alarm level triggers a visual and audio alarm. The contacts on the alarm switch will close. The redundant pump starting system will be energized.

b. The audible alarm may be silenced by means of the externally-mounted push-to-silence button.

c. Visual alarm remains illuminated until the wastewater level in the wet well drops below the "off" setting of the alarm pressure switch.

C. The pump shall be by Barnes or approved equal and as shown on the Drawings.

Part 3 Execution

3.01 Existing Utilities and Obstructions

A. The Drawings indicate utilities or obstructions that are known to exist according to the best information available to the Owner. The Contractor shall call the Tennessee One Call System, Inc. (1-800-351-1111) as required by the Tennessee Law "Underground Utility Damage Prevention Act" (Code Section 65-31-106) and all utilities, agencies or departments that own and/or operate utilities in the vicinity of the construction work site at least 72 hours (three business days) prior to construction to verify the location of the existing utilities.

B. Existing Utility Location: The following steps shall be exercised to avoid interruption of existing utility service.

1. Provide the required notice to the utility owners and allow them to locate their facilities according to Tennessee law. Field utility locations are valid for only ten days after original notice. The Contractor shall ensure, at the time of any excavation that a valid utility location exists at the point of excavation.

2. Expose the facility to verify its true location and grade for a distance of at least 200 feet in advance of pipeline construction to verify its true location and grade. Repair, or have repaired, any damage to utilities resulting from locating or exposing their true location.

3. Avoid utility damage and interruption by protecting it with means or methods recommended by the utility owner.

4. Maintain a log identifying when phone calls were made, who was called, area for which utility relocation was requested and work order number issued, if any. The Contractor shall provide the Engineer an updated copy of the log bi-weekly, or more frequently if required.

C. Conflict with Existing Utilities

1. Horizontal Conflict: Horizontal conflict shall be defined as when the actual horizontal separation between a utility, main, or service and the proposed

pressure main does not permit safe installation of the pressure main by the use of sheeting, shoring, tieing-back, supporting, or temporarily suspending service of the parallel or crossing facility. The Contractor may change the proposed alignment of the pressure main to avoid horizontal conflicts if the new alignment remains within the available right-of-way or easement and complies with regulatory agency requirements after a written request to and subsequent approval by the Engineer. If, in the opinion of the Engineer, the pressure main's proposed location cannot be adjusted, thus requiring the relocation of an existing utility, the Owner will direct the Contractor to relocate the utility as part of the Contract with the costs of such relocation being paid for as part of a change order.

2. Vertical Conflict: Vertical conflict shall be defined as when the actual vertical separation between a utility, main, or service and the proposed pressure main does not permit the crossing without immediate or potential future damage to the utility, main, service, or the pressure main. The Contractor may change the proposed grade of the pressure main to avoid vertical conflicts if the changed grade provides minimum required capacity, maintains adequate cover and complies with regulatory agencies requirements, after written request to and subsequent approval by the Engineer. If, in the opinion of the Engineer, the pressure main's proposed location cannot be adjusted, thus requiring the relocation of an existing utility, the Owner will direct the Contractor to relocate the utility as part of the Contract with the costs of such relocation being paid for as part of a change order.

D. Water and Sewer Separation

1. Water mains should maintain a minimum 10 foot edge-to-edge separation from sewer lines, whether gravity or pressure. If the main cannot be installed in the prescribed easement or right-of-way and provide the 10 foot separation, the separation may be reduced, provided the bottom of the water main is a minimum of 18-inches above the top of the sewer. Should neither of these two separation criteria be possible, the water main shall be installed below the sewer with a minimum vertical separation of 18-inches.

2. The water main, when installed below the sewer, shall be encased in concrete with a minimum 6-inch concrete depth to the first joint in each direction. Where water mains cross the sewer, the pipe joint adjacent to the pipe crossing the sewer shall be cut to provide maximum separation of the pipe joints from the sewer. A minimum of 18-inches of vertical clearance must be maintained at all times.

3. No water main shall pass through, or come in contact with, any part of a sanitary sewer manhole.

E. Miscellaneous Obstructions: The Contractor shall coordinate its work with the individual property owners during the installation of the Individual Pumping Systems. Property owners may have invisible fences, underground sprinkler systems, storm drainage, and other miscellaneous obstructions which must be worked around. The Contractor shall take all necessary measures to minimize disruption or damage to

such systems. The Contractor shall restore any damage to personal property as soon as possible.

3.02 Construction Along Highways, Streets and Roadways

A. Install pipe lines and appurtenances along highways, streets and roadways in accordance with the applicable regulations of, and permits issued by applicable regulatory agencies with reference to construction operations, safety, traffic control, road maintenance and repair.

B. Traffic Control

1. The Contractor shall: provide, erect and maintain all necessary barricades, suitable and sufficient lights and other traffic control devices; provide qualified flagmen where necessary to direct traffic; take all necessary precautions for the protection of the work and the safety of the public.

2. Construction traffic control devices and their installation shall be in accordance with the current Manual On Uniform Traffic Control Devices for Streets and Highways.

3. Placement and removal of construction traffic control devices shall be coordinated with the applicable regulatory agencies a minimum of 48 hours in advance of the activity.

4. Placement of construction traffic control devices shall be scheduled ahead of associated construction activities. Construction time in street right-of-way shall be conducted to minimize the length of time traffic is disrupted. Construction traffic control devices shall be removed immediately following their useful purpose. Traffic control devices used intermittently, such as "Flagmen Ahead", shall be removed and replaced when needed.

5. Existing traffic control devices within the construction work zone shall be protected from damage. Traffic control devices requiring temporary relocation shall be located as near as possible to their original vertical and horizontal locations. Original locations shall be measured from reference points and recorded in a log prior to relocation. Temporary locations shall provide the same visibility to affected traffic as the original location. Relocated traffic control devices shall be reinstalled in their original locations as soon as practical following construction.

6. Construction traffic control devices shall be maintained in good repair, and shall be clean and visible to affected traffic for daytime and nighttime operation. Traffic control devices affected by the construction work zone shall be inspected daily.

7. Construction warning signs shall be black legend on an orange background. Regulatory signs shall be black legend on a white background. Construction sign panels shall meet the minimum reflective requirements of the Department

of Transportation and the county. Sign panels shall be of durable materials capable of maintaining their color, reflective character and legibility during the period of construction.

8. Channelization devices shall be positioned preceding an obstruction at a taper length as required by the current Manual On Uniform Traffic Control Devices for Streets and Highways, as appropriate for the speed limit at that location. Channelization devices shall be patrolled to insure that they are maintained in the proper position throughout their period of use.

C. Construction Operations

1. Perform all work along highways, streets and roadways to minimize interference with traffic.

2. Stripping: Where the pipe line is laid along road right-of-way, strip and stockpile all sod, topsoil and other material suitable for right-of-way restoration.

3. Trenching, Laying and Backfilling: Do not open the trench any further ahead of pipe laying operations than is necessary. Backfill and remove excess material immediately behind laying operations. Complete excavation and backfill for any portion of the trench in the same day.

4. Shaping: Reshape damaged slopes, side ditches, and ditch lines immediately after completing backfilling operations. Replace topsoil, sod and any other materials removed from shoulders.

D. Excavated Materials: Do not place excavated material along highways, streets and roadways in a manner which obstructs traffic. Sweep all scattered excavated material off the pavement in a timely manner.

E. Drainage Structures: Keep all side ditches, culverts, cross drains, and other drainage structures clear of excavated material. Care shall be taken to provide positive drainage to avoid ponding or concentration of runoff.

F. Landscaping Features: Landscaping features shall include, but are not necessarily limited to: fences; property corners; cultivated trees and shrubbery; manmade improvements; subdivision and other signs within the right-of-way and easement. The Contractor shall take extreme care in moving landscape features and promptly re-establishing these features.

G. Maintaining Highways, Streets, Roadways and Driveways

1. The pressure sewer mains shall be punched under all paved surfaces. After several unsuccessful attempts to punch the pipe, the Engineer may direct the Contractor to trench across the pavement.

2. Maintain streets, highways, roadways and driveways in suitable condition for movement of traffic until completion and final acceptance of the work.

3. During the time period between pavement removal and completing permanent pavement replacement, maintain highways, streets and roadways by the use of steel running plates. The edges of running plates shall have asphalt placed around their periphery to minimize vehicular impact. The backfill above the pipe shall be compacted, as specified elsewhere up to the existing pavement surface to provide support for the steel running plates.

4. Furnish a road grader or front-end loader for maintaining highways, streets, and roadways. Make the grader or front-end loader available at all times.

5. Immediately repair all driveways that are cut or damaged. Maintain them in a suitable condition for use until completion and final acceptance of the work.

3.03 Pipe Distribution

A. Pipe shall be distributed and placed in such a manner that will not interfere with traffic.

B. No pipe shall be strung further along the route than 500 feet beyond the area in which the Contractor is actually working without written permission from the Owner. The Owner reserves the right to reduce this distance to a maximum distance of 200 feet in residential and commercial areas based on the effects of the distribution to the adjacent property owners.

C. No street or roadway may be closed for unloading of pipe without first obtaining permission from the proper authorities. The Contractor shall furnish and maintain proper warning signs and obstruction lights for the protection of traffic along highways, streets and roadways upon which pipe is distributed.

D. No distributed pipe shall be placed inside drainage ditches.

E. Distributed pipe shall be placed as far as possible from the roadway pavement, but no closer than five feet from the roadway pavement, as measured edge-to-edge.

3.04 Location and Grade

A. The Drawings show the alignment of the pressure mains and the position of manholes and other appurtenances. The slope shown on the profile and/or called for in the Specifications is the slope of the invert of the pipe.

B. After the Contractor locates and marks the manhole centerlines or baselines of the sewer, the Contractor shall perform clearing and grubbing.

3.05 Laying and Jointing Pipe and Accessories

A. Lay all pipe and fittings to accurately conform to the lines and grades established by the Engineer.

B. Pipe Installation

1. Proper implements, tools and facilities shall be provided for the safe performance of the Work. All pipe, fittings and valves shall be lowered carefully into the trench by means of slings, ropes or other suitable tools or equipment in such a manner as to prevent damage to sewer materials and protective coatings and linings. Under no circumstances shall sewer materials be dropped or dumped into the trench.

2. All pipe, fittings, valves and other appurtenances shall be examined carefully for damage and other defects immediately before installation. Defective materials shall be marked and held for inspection by the Engineer, who may prescribe corrective repairs or reject the materials.

3. All lumps, blisters and excess coating shall be removed from the socket and plain ends of each pipe, and the outside of the plain end and the inside of the bell shall be wiped clean and dry and free from dirt, sand, grit or any foreign materials before the pipe is laid. No pipe which contains dirt shall be laid.

4. Foreign material shall be prevented from entering the pipe while it is being placed in the trench. No debris, tools, clothing or other materials shall be placed in the pipe at any time.

5. As each length of pipe is placed in the trench, the joint shall be assembled and the pipe brought to correct line and grade. The pipe shall be secured in place with approved backfill material.

6. It is common practice to lay pipe with the bells facing the direction in which work is progressing, however, it is not mandatory.

7. Applying pressure to the top of the pipe, such as with a backhoe bucket, to lower the pipe to the proper elevation or grade shall not be permitted.

8. Provide tracer wire and detection tape for all non-metallic pressure pipe. The tracer wire shall be wrapped around the pipe and shall be looped up to the surface at all valve locations. Detection tape shall be installed on top of all pipe.

9. Polyethylene Encasement: Installation shall be in accordance with AWWA C105 and the manufacturer's instructions. All ends shall be securely closed with tape and all damaged areas shall be completely repaired to the satisfaction of the Engineer.

C. Alignment and Gradient

1. Lay pipe straight in alignment and gradient or follow true curves, where shown on the Drawings, as nearly as practicable. Do not deflect any joint more than the maximum deflection recommended by the manufacturer.

2. Maintain a transit, level and accessories on the job to lay out angles and ensure that deflection allowances are not exceeded.

D. Expediting of Work: Excavate, lay the pipe, and backfill as closely together as

possible. Do not leave unjointed pipe in the trench overnight. Backfill and compact the trench as soon as possible after laying and jointing is completed. Cover the exposed end of the installed pipe each day at the close of work and at all other times when work is not in progress. If necessary to backfill over the end of an uncompleted pipe or accessory, close the end with a suitable plug, either push-on, mechanical joint, restrained joint or as approved by the Engineer.

E. Joint Assembly

1. Push-on, mechanical, flange and restrained type joints shall be assembled in accordance with the manufacturer's recommendations.

2. Each restrained joint shall be inspected by the Contractor to ensure that it has been "homed" 100 percent.

F. Cutting Pipe

1. Cut ductile iron pipe using an abrasive wheel saw.

2. Cut PVC pipe using a suitable saw.

3. Remove all burrs and smooth the end before jointing.

4. The Contractor shall cut the pipe and bevel the end, as necessary, to provide the correct length of pipe necessary for installing the fittings, valves, accessories and closure pieces in the correct location. Only push-on or mechanical joint pipe shall be cut.

G. Valve and Fitting Installation

1. Prior to installation, valves shall be inspected for direction of opening, number of turns to open, freedom of operation, tightness of pressure-containing bolting and test plugs, cleanliness of valve ports and especially seating surfaces, handling damage and cracks. Defective valves shall be corrected or held for inspection by the Engineer. Valves shall be closed before being installed.

2. Valves, fittings, plugs and caps shall be set and joined to the pipe in the manner specified in this Section for cleaning, laying and joining pipe, except that 12-inch and larger valves shall be provided with special support, such as treated timbers, crushed stone, concrete pads or a sufficiently tamped trench bottom so that the pipe will not be required to support the weight of the valve.

3. A valve box shall be provided on each underground valve. They shall be carefully set, centered exactly over the operating nut and truly plumbed. The valve box shall not transmit shock or stress to the valve. The bottom flange of the lower belled portion of the box shall be placed below the valve operating nut. This flange shall be set on brick, so arranged that the weight of the valve box and superimposed loads will bear on the base and not on the valve or pipe. Extension stems shall be installed where depth of bury places the operating nut in excess of 30-inches beneath finished grade so as to set the top of the

operating nut 30-inches below finished grade. The valve box cover shall be flush with the surface of the finished area or such other level as directed by the Engineer.

4. In no case shall valves be used to bring misaligned pipe into alignment during installation. Pipe shall be supported in such a manner as to prevent stress on the valve.

H. Air Valve Manholes

1. Construct the vault or manhole as detailed on the Drawings.

2. The frame and cover shall be cast into the top slab or cone.

3. Where vent pipe are shown on the Drawings, vents shall be of one-piece, welded steel construction. Vent pipes shall equal air valve size, but no less than 4-inches. The vent pipe shall be grouted into a precast hole in the vault. The discharge of the vent pipe shall be provided with a 3/16-inch PVC coated mesh screen.

I. House Connections: Install tees in locations designated by the Engineer for future connection of service lines. Plug the branch of the tee. Record the location of fittings installed on a copy of the Contract Drawings to be submitted as Record Drawings.

3.06 Manhole and Precast Concrete Product Construction

A. Construct manholes as shown on the Drawings.

B. Precast Concrete: Handle sections carefully to prevent cracking or chipping. Provide uniform bedding of the bottom section to prevent uneven loading. Install gaskets and joint sealants in accordance with manufacturer's recommendations to produce a watertight structure.

C. Brick: Bed the bottom and sides of every brick in mortar. Apply a smooth coat of mortar, 3/4-inch thick, on the inside and outside.

D. Top Elevations: Build manholes outside of paved areas to 18-inches above finished grade unless otherwise shown on the Drawings or directed by the Engineer. Build manholes in paved areas to existing grades.

E. Frames and Covers: Unless frame and cover is at grade, the frame shall be cast into the cone section.

F. Manholes shall be constructed such that their walls are plumb.

3.07 Thrust Restraint

A. Provide restraint at all points where hydraulic thrust may develop.

B. Retainer Glands: Provide retainer glands where shown on the Drawings and all associated fittings, valves and related piping. Retainer glands shall be installed in accordance with the manufacturer's recommendations, particularly, the required torque of the set screws. The Contractor shall furnish a torque wrench to verify the torque on all set screws which do not have inherent torque indicators.

C. Harnessing: Provide harness rods only where specifically shown on the Drawings or directed by the Engineer. Harness rods shall be manufactured in accordance with ASTM A 36 and shall have an allowable tensile stress of no less than 22,000 psi. Harness rods shall be hot dip galvanized or field coated with bitumastic before backfilling. Where possible, harness rods shall be installed through the mechanical joint bolt holes. Where it is not possible, provide 90 degree bend eye bolts. Eye bolts shall be of the same diameter as specified in AWWA C111 for that pipe size. The eye shall be welded closed. Where eye bolts are used in conjunction with harness rods, an appropriate size washer shall be utilized with a nut on each end of the harness rod. Eye bolts shall be of the same material and coating as the harness rods.

D. Concrete Blocking

1. Provide concrete blocking for all other bends, tees, valves, and other points where thrust may develop, except where other means of thrust restraint are specifically shown on the Drawings.

2. Form and pour concrete blocking at fittings as shown on the Drawings and as directed by the Engineer. Pour blocking against undisturbed earth. Increase dimensions when required by over excavation.

E. Thrust Collars: Collars shall be constructed as shown on the Drawings. Concrete and reinforcing steel shall meet the requirements specified in Article 2.03 of this Section. The welded-on collar shall be attached to the pipe by the pipe manufacturer.

3.08 Concrete Collars

Construct collars as shown on the Drawings.

3.09 Detection Wire

A. Provide detection wire for all PVC pipe force mains and pressure sewers. Detection wire shall be installed with the pipe and wrapped once around the pipe on each joint. The ends of the wire shall be brought up through the valve box within 4-inches of the top.

B. Where required, detection wire shall be buried 4 to 10 inches beneath the ground surface directly over the top of the pipe. In no case shall detection wire be buried greater than 20 inches from the finished grade surface.

3.10 Inspection and Testing

A. Pressure and Leakage Test

1. All sections of pipeline subject to internal pressure shall be pressure tested in accordance with AWWA C600. A section of line will be considered ready for testing after completion of all thrust restraint and backfilling. Each segment of pipeline between line valves shall be tested individually.

2. Test Preparation

   a. Flush pipeline section thoroughly at flow velocities adequate to remove debris from pipe and valve seats. Partially operate valves and hydrants to clean out seats. Provide correctly sized temporary outlets in number adequate to achieve flushing velocities.

   b. Provide temporary blocking, bulkheads, flanges and plugs as necessary, to assure all new pipe, valves and appurtenances will be pressure tested.

   c. Before applying test pressure, air shall be completely expelled from the pipeline and all appurtenances. Unless permanent air vents are in place, insert temporary corporation stops at highpoints to expel air as line is filled with water.

   d. Fill pipeline slowly with water. Provide a suitable pump with an accurate water meter to pump the line to the specified pressure. Differential pressure at valves and hydrants shall equal the maximum possible, but shall not exceed manufacturer's pressure rating.

3. Test Pressure: Test the pipeline such that no point has a pressure less than 1.5 times the future working pressure for at least two hours. The test pressure shall not vary by more than 5 psi for the test duration. Should the pressure drop more than 5 psi at any time during the test period, the pressure shall be restored to the specified test pressure. Provide an accurate pressure gage with graduation not less than 5 psi.

4. Leakage: Leakage shall be defined as the quantity of water that must be pumped into the test section equal to the sum of the water, to maintain pressure within 5 psi of the specified test pressure for the test duration plus water required to return line to test pressure at the end of the test. Leakage shall be the total cumulative amount measured on a water meter. The Owner assumes no responsibility for leakage occurring through existing valves.

5. Test Results: No test section shall be accepted if the leakage exceeds the limits determined under Section 4 of AWWA C600. The leakage test shall be repeated until the test section is accepted. All visible leaks shall be repaired regardless of leakage test results.

6. Completion: After a pipeline section has been accepted, relieve test pressure. Record type, size and location of all outlets on record drawings.

3.11 Protection and Restoration of Work Area

A. General: Return all items and all areas disturbed, directly or indirectly by work under these Specifications, to their original condition or better, as quickly as possible after work is started.

1. The Contractor shall plan, coordinate, and prosecute the work such that disruption to personal property and business is held to a practical minimum.

2. All construction areas abutting lawns and yards of residential or commercial property shall be restored promptly. Backfilling of underground facilities, ditches, and disturbed areas shall be accomplished on a daily basis as work is completed. Finishing, dressing, and grassing shall be accomplished immediately thereafter, as a continuous operation within each area being constructed and with emphasis placed on completing each individual yard or business frontage. Care shall be taken to provide positive drainage to avoid ponding or concentration of runoff.

3. Handwork, including raking and smoothing, shall be required to ensure that the removal of roots, sticks, rocks, and other debris is removed in order to provide a neat and pleasing appearance.

B. Man-Made Improvements: Protect, or remove and replace with the Engineer's approval, all fences, walkways, mail boxes, pipe lines, drain culverts, power and telephone lines and cables, property pins and other improvements that may be encountered in the work.

C. Cultivated Growth: Do not disturb cultivated trees or shrubbery unless approved by the Engineer. Any such trees or shrubbery which must be removed shall be heeled in and replanted under the direction of an experienced nurseryman.

D. Cutting of Trees: Do not cut trees for the performance of the work except as absolutely necessary. Protect trees that remain in the vicinity of the work from damage from equipment. Do not store spoil from excavation against the trunks. Remove excavated material stored over the root system of trees within 30 days to allow proper natural watering of the root system. Repair any damaged tree over 3-inches in diameter, not to be removed, under the direction of an experienced nurseryman. All trees and brush that require removal shall be promptly and completely removed from the work area and disposed of by the Contractor. No stumps, wood piles, or trash piles will be permitted on the work site.

E. Disposal of Rubbish: Dispose of all materials cleared and grubbed during the construction of the project in accordance with the applicable codes and rules of the appropriate county, state and federal regulatory agencies.

F. Swamps and Other Wetlands

1. The Contractor shall not construct permanent roadbeds, berms, drainage structures or any other structures which alter the original topographic features within the easement.

2. All temporary construction or alterations to the original topography will incorporate measures to prevent erosion into the surrounding swamp or wetland. All areas within the easement shall be returned to their original topographic condition as soon as possible after work is completed in the area. All materials of construction and other non-native materials shall be disposed by the Contractor.

3. The Contractor shall provide temporary culverts or other drainage structures, as necessary, to permit the free migration of water between portions of a swamp, wetland or stream which may be temporarily divided by construction.

4. The Contractor shall not spread, discharge or dump any fuel oil, gasoline, pesticide, or any other pollutant to adjacent swamps or wetlands.

3.12 Installation of Individual Pump System

A. Sequence of Construction: The installation of the individual pump system shall begin after the pressure sewer mains and service connections have been constructed, approved by the Engineer, and accepted by the Owner. Installation of the individual pump system shall include the following steps:

1. Examine the property with the Engineer and Owner to determine the location for the grinder pump station and the alarm/disconnect panel.

2. Install the grinder pump station and alarm/disconnect panel at the designated location according to specifications.

3. Install pressure service line from the grinder pump station to the service connection.

4. Reroute the gravity service line from the house to the grinder pump station and complete the wiring. Cap or plug the existing gravity service line to the septic tank.

5. Open the ball valve at the service connection and test the system.

6. Clean-up and restore the property to its original condition.

B. Installation of Grinder Pump Station

1. The Contractor shall provide a firm, dry subgrade for the structure, and shall guard against flotation or other damage resulting from general water or flooding. The grinder pump stations shall not be set into the excavation until the installation procedures and excavation have been approved by the Engineer.

2. Remove packing material. Users instructions must be given to the Owner. Hardware supplied with the unit, if required, shall be used at installation. The basin shall be supplied with a standard 4-inch inlet grommet (4.5-inch o.d.) for connecting the incoming sewer line. Appropriate inlet piping must be used. The

basin shall not be dropped, rolled or laid on its side for any reason.

3. Installation shall be accomplished so that 1 to 4-inches of accessway below the bottom of the lid extends above the finished grade line. The finished grade shall slope away from the unit. The diameter of the hole must be large enough to allow for the concrete anchor.

4. A minimum 6-inch layer of naturally rounded aggregate, clean and free flowing, with particle size of not less than 1/8-inch nor more than 3/4-inch shall be used as bedding material under each unit. A concrete anti-flotation collar, as detailed on the Drawings, and sized according to the manufacturer's instructions, shall be required and shall be precast to the grinder pump or poured-in-place. Each grinder pump station with its precast anti-flotation collar shall have a minimum of three lifting eyes for loading and unloading purposes. The unit shall be leveled and filled with water to the bottom of the inlet to help prevent the unit from shifting while the concrete is being poured. The concrete must be manually vibrated to ensure there are no voids. If it is necessary to pour the concrete to a level higher than the inlet piping, an 8-inch sleeve is required over the inlet prior to the concrete being poured.

5. Backfill of clean, native earth, free of rocks, roots and foreign objects shall be thoroughly compacted in lifts not exceeding 12-inches to a final Proctor Density of 85 percent. Improper backfilling may result in damaged accessways. The grinder pump station shall be installed at a minimum depth of 30-inches from grade to the top of the 1-1/4-inch discharge line. The finish grade line shall be 1 to 4-inches below the bottom of the lid, and final grade shall slope away from the grinder pump station.

6. All restoration shall be the Contractor's responsibility. Properties shall be restored to their original condition in all respects, including but not limited to, sidewalk replacement, landscaping, loaming and seeding, and restoration of traveled ways, as directed by the Engineer.

7. The electrical enclosure shall be furnished, installed and wired to the grinder pump station by the Contractor.

8. An alarm device is required on every installation. The Contractor shall mount the alarm device in a conspicuous location. The alarm/disconnect panel shall be connected to the grinder pump station by a length of cable as shown on the Drawings supplied by the manufacturer. The power and alarm circuits must be on separate power circuits.

C. Rock Excavation: Any rock encountered during the installation of the individual pump system, including the trenching of the pressure service and the gravity service lines, shall be removed by means other than blasting.

END OF SECTION

Part 1 General

1.01 Scope

A. The work described in this section includes furnishing all labor, materials, equipment, tools and incidentals for a complete and operable installation of a submersible sewage pump station complete with all equipment as shown on the Drawings and specified herein. All equipment shall be installed, adjusted, tested and placed in operation in accordance with these Specifications and the manufacturer's recommendations.

B. The principle items of equipment to be furnished for the pump station shall include submersible non-clog sewage pumps, motors, internal and external piping, pump accessories, bypass pump ports, and valves; concrete wet well and valve vaults with access hatches; control panel with circuit breakers, motor starters, automatic pump control system, and other components as required; all internal and external wiring and appurtenances necessary to provide a complete and operating pump station.

C. Where the required power supply does not exist, the Contractor shall coordinate with the appropriate power company to route the power supply to the site.

1.02 Qualifications

The pump manufacturer shall have similar units in operation for a minimum of five years in the United States.

1.03 Design Requirements

A. Pumps shall be totally submersible, electric motor driven, non-clog, sewage pumps.

B. The Contractor shall furnish and install a lockable, non-freeze yard hydrant and required water service line for pump station maintenance. The yard hydrant shall be manufactured by Kupferle, Zurn, or approved equal.

C. Pump station design shall incorporate generator dry contacts and manual transfer switch to allow for safe and fast connection of a portable generator to the pumping system during lost-power conditions.

D. Pump station design shall incorporate a permanent quick-connect bypass system as shown and in accordance with the Standard Details and these Specifications.

E. Pumps shall be constructed to meet explosion-proof requirements. Pumps shall be FM or UL approved for use in hazardous locations defined as Class 1, Division 1, Group D.

F. The operating range of the pump shall include minimum head, rated and shut-off conditions. The pumps shall be non-overloading throughout this operating range.

G. Pump design shall allow for continuous, partially or completely submerged operation

without supplementary cooling.

H. The pump manufacturer shall review design and layout drawings to insure that installation arrangements are suitable for their equipment. Any potential conflicts or recommended modification shall be noted on the shop drawings or by a pre-submittal request for information if appropriate. Any modifications required to satisfy manufacturer's recommendations shall be at the Contractor's expense.

I. Pump shall incorporate an automatic discharge connection, allowing each unit to be removed for inspection or service by simply lifting the pump. Re-connection shall require only lowering of the pump into position.

1.04 Submittals

A. The submittals required in this section include (but are not limited to) the following:

1. Certified characteristic pump curves showing head capacity and horsepower, including minimum head, rated and shut-off conditions.

2. Pump manufacturer's name, pump size or model number, weight and a descriptive bulletin of the pump to be furnished.

3. Components and component materials of construction

4. Seal descriptions

5. Impeller diameter

6. Maximum impeller permissible

7. NPSH requirements

8. Operating point

9. Certified pump test

10. Motor manufacturer's name, motor horsepower, rpm and frame size, weight and descriptive bulletin of the motor to be furnished. Include motor manufacturer's certified dimension sheet that lists motor features and include typical motor data sheet.

11. Outline dimension drawings of the pump.

12. Control panel enclosure layout, electrical schematic diagrams and component specifications.

13. Wet well plan and section drawings with dimensions and equipment shown. Include specifications of all valves, valve operators, piping, supports, hangers and cover.

B. Operation and maintenance manuals shall be furnished to the Engineer.

C. The Contractor shall submit for approval complete characteristic curves of the pumps before fabrication is started. Curves shall also indicate required NPSH, efficiency, horsepower, maximum diameter impeller that can be installed in the pump, and proposed impeller diameter for the application.

1.05 Storage and Protection

A. Pumps and accessories shall be stored and protected in accordance with the manufacturer's recommendations.

B. Pumps shall be completely drained prior to shipment. Suction and discharge ports shall be provided with plastic plugs. Each pump shall be secured to a wooden skid to facilitate handling and storage.

1.06 Quality Assurance

The manufacturer shall provide a written certification to the Engineer that all equipment furnished complies with all applicable requirements of these Specifications.

Part 2 Products

2.01 Acceptable Manufacturers

All pumps shall be supplied by a single manufacturer. Pumps shall be manufactured by Flygt, ABS, or approved equal.

2.02 Materials and Construction

A. Pump Construction

1. All major castings, including the motor housing, bearing housing, volute and impeller shall be of gray iron, ASTM A-48, Class 35B.

2. All major parts, such as the stator casing, oil casing, volute, sliding bracket and discharge connection shall be of gray iron, ASTM A-48, Class 35B. All exposed bolts and nuts shall be Type 304 stainless steel. All mating surfaces of major parts shall be machined and fitted with rubber O-ring seals where watertight sealing is required. All parts shall be interchangeable and watertight sealing shall not require additional machining of replacement parts, sealing compounds, or the application of specific torques to connectors.

3. No portion of the pump unit shall bear directly on the floor of the wet well. There shall be no more than one 90 degree bend allowed between the volute discharge flange and station piping.

4. A sliding guide bracket shall be an integral part of the pump unit. The volute casing shall have a machined discharge flange which automatically connects directly to, or through an intermediate coupling to a discharge base. The discharge base shall be bolted to the floor of the sump and shall have a flanged connection to the discharge piping. There shall be no need for adjustment, fasteners, clamps, or other devices to connect the pump to the discharge base.

B. Impeller

1. The impeller shall be constructed with a long throughlet without acute turns and a maximum of three vanes. The impeller shall be dynamically balanced. Static and dynamic balancing operations shall not deform or weaken it. The impeller shall be a slip fit or taper fit to the shaft and key driven. Non-corroding fasteners shall be used.

2. The impeller shall be gray cast iron, ASTM A-48, Class 35B, be of non-clog design, capable of handling moderately abrasive solids, fibrous material, heavy sludge and other matter found in normal sewage applications.

C. Shaft Seals

1. Each pump shall be provided with a mechanical, rotating shaft seal system running in an oil reservoir having separate, constantly hydro-dynamically lubricated, lapped seal faces. The lower seal unit between the pump and oil chamber shall contain one stationary and one positively driven, rotating carbon ring. The upper seal unit between the oil sump and motor housing shall contain one stationary ceramic seal ring and one positively driven rotating ceramic seal ring.

2. Each interface shall be held in contact by its own independent spring system, supplemented by external liquid pressures. The seals shall require neither maintenance nor adjustment, but shall be easily inspected and replaceable. No seal damage shall result from operating the pumping unit out of its liquid environment. The seal system shall not rely upon the pumped media for lubrication. The oil reservoir shall have a drain and inspection plug, with positive seal, which shall be easily accessible from outside the pump.

3. A leakage sensing system shall be provided to detect the intrusion of moisture in either the seal chamber or stator housing.

2.03 Guide Rails

Guide rails shall be Type 304 stainless steel, Schedule 40 pipe attached to the top and bottom of the wet well. Intermediate guide bar supports shall be provided as required to insure a rigid installation. Guide bars shall not support any of the weight of the pump.

2.04 Lifting System

A. Provide each pump with a stainless steel lifting chain fitted to the top of the pump and extending to the access cover. Size chain for 50 percent greater weight than pump weight.

B. Provide stainless steel shackles for chain connection. Chain shall be as shown on the Drawings to accommodate wet well depth.

2.05 Motor

A. Pump Motor

1. Pump motors shall be designed in accordance with the standards of NEMA, design Type L (single phase) or B (three phase, Class B insulation, with a minimum service factor of 1.15. The motor shall be designed for continuous duty capable of sustaining a minimum of 15 evenly spaced starts per hour. Refer to Table 1 for additional pump characteristics.

2. The motor shall be housed in a watertight casing. The pump and motor shaft shall be a one-piece, solid shaft of AISI Type 416 or 420 stainless steel and shall be completely isolated from the pumped liquid.

3. The shaft shall be supported above and below the rotor by anti-friction bearings designed to provide long life and minimize shaft deflection. At least one bearing shall be double row type. Bearings shall have a minimum AFBMA B-10 life of 50,000 hours.

4. The pump shall be capable of running continuously at design capacity and head for a period of at least two hours with a water level at the top of the pump volute without overheating or damage to seals or watertight integrity.

5. Thermal sensors shall be provided to monitor stator temperature. One thermal switch shall be imbedded in the end coils of each stator winding. The thermal switch shall be used in conjunction with, and in addition to, external motor overload protection and shall be wired into the control panel as shown on the Drawings.

B. Cable

1. Cable shall be suitable for submersible pump applications and this shall be indicated by a code or legend permanently embossed on the cable. Cable sizing shall conform to NEC specifications for pump motors. Length shall be sufficient for pump and control panel placement as shown on the Drawings with 10 feet spare coiled in wetwell.

2. The cable entry sealing fitting shall relieve stress on conductors and provide a watertight and submersible seal. The conductors shall connect to a terminal board which shall be provided with a moisture-tight seal between the cable entry junction chamber and the motor.

2.06 Controls

A. Supplier: All controls specified shall be furnished by the pump manufacturer.

B. Control Panel:

1. Power Supply: 230 volts, single phase or 460 volts, three phase. All controls shall operate on 120 volts maximum. Provide a suitably sized control power transformer with primary and secondary overcurrent protection. Provide a lockable main molded case circuit breaker with interrupting capacity of 22,000 A.

2. Enclosure: NEMA 4X stainless steel, pad lockable.

3. Components

a. Starters: NEMA size 1 FVNR, circuit breaker combination type with overload protection in each phase. Interrupting capacity is a minimum of 22,000 AIC.

b. Relays: Heavy duty, industrial control type, 10A 600 volt reversible contacts, equal to Square D, Class 8501, Type X.

c. Selectors and Pushbuttons: Heavy duty, oil-tight and octagonal ring.

d. Indicating Lights: Heavy duty, oil-tight, transformer type with LED lamps.

e. Controller: Pump alternator to switch between lead and lag pumps.

f. Alarm: High water level (HWL) alarm with visual and audible annunciation.

g. Pump Protection: Monitors pump thermal switches and any other manufacturer required or recommended protection, i.e., water intrusion, detection, etc.

h. Climate Control: Thermostatically controlled space heater.

i. Indicating Meter: Elapsed time meter for lead and lag pumps, minutes, six digit, non-reset type.

j. Relay Switches: Provide intrinsically safe (IS) relay switches between power source and level, seal and heat sensors suitable for Class 1, Group D, Division 1 rating.

4. Panel Construction: Route all wiring in wireways. Protect all wiring across panel hinges. Provide numbered terminal strips for all field wiring terminations. Use barriers to separate 230/460 volt from 120 and lower voltage sections.

5. Remote Signals: One 10 amp form "C" dry contact for each of the following:

   a. Pump No. 1 (RUN)

   b. Pump No. 2 (RUN)

   c. Level Alarm (WETWELL HIGH LEVEL)

   d. Pump Malfunction (PUMP FAIL)

6. Control Functions: Hand-Off-Auto selectors for each pump.

7. Provide laminated as-built schematic in panel door.

C. Liquid Level Sensors: For each wet well, furnish and install four liquid level sensors of the non-floating, displacement type equal to Flygt ENH-10 (mercury tilt switches). Level sensors shall be rated for operation at 24 volt, single phase, 60 Hz. Provide sensors with lengths of cable for installation as shown on the Drawings.

2.07 Accessories

A. Aluminum Floor Doors

1. Door shall be a single or double leaf type as shown on the Drawings built to withstand 150 pounds per square foot.

2. The frame shall be 1/4-inch extruded aluminum with built-in neoprene cushion and with strap anchors bolted to the exterior. Door leaf shall be 1/4-inch aluminum diamond plate reinforced with aluminum stiffeners as required. Stainless steel hinges shall be bolted to the underside and pivot on torsion bars that counterbalance the door for easy operation. The door shall open to 90 degrees and lock automatically in that position. A vinyl grip handle shall be provided to release the cover for closing. Doors shall be equipped with a snap lock and removable handle. Door shall also be equipped with hasp and padlock in addition to built-in locking mechanisms. Padlocks for all doors shall be keyed alike. Bituminous coating shall be applied to the exterior of the frame by the manufacturer. All parts shall be aluminum or stainless steel.

3. Door shall be Type KD for double leaf doors and Type K for single leaf doors by The Bilco Company.

B. Valve Vault: Valve Vault in precast manhole shall include the following:

1. Ball check valves, neoprene ball type, non-clog, self-cleaning.

2. Plug valves equal to DeZurik.

3. Valve operator extensions (non-corrosive type stainless steel).

2.08 Shop Painting

All materials specified under this section shall be shop primed as part of the work under this section. Surface preparation and paint shall be as specified by the equipment manufacturer.

Part 3 Execution

3.01 Installation

A. Equipment Installation: All equipment shall be installed in accordance with approved shop drawings, the manufacturer's recommendations and these Specifications.

B. Anchorage: Stainless steel anchor bolts, nuts and washers, as well as any templates necessary for setting the anchorage, shall be furnished by the equipment manufacturer. Placement of the anchor bolts shall be done by the Contractor from certified dimension shop drawings supplied by the equipment manufacturer.

C. Leveling and Grouting

1. Level and align pump and motor in accordance with the respective manufacturer's published data.

2. Grout pump and motor with non-shrink grout in accordance with the ACI and the equipment manufacturer's and grout manufacturer's published specifications.

3.02 Field Painting

All shop primed surfaces shall be cleaned and painted as specified by the manufacturer.

3.03 Inspection and Testing

Following installation, operating tests will be performed demonstrating to the Engineer that each mechanism and the system as a whole will function in a satisfactory manner. The Contractor shall make, at Contractor's own expense, all necessary changes, modifications and/or adjustments required to ensure satisfactory performance.

3.04 Manufacturer’s Services

A. Furnish the on-site services of a factory representative for one, four hour day to inspect the final installation, observe a functional test of the equipment and instruct the Owner’s personnel in the proper operation of the equipment. The factory representative shall have complete knowledge of the proper start-up procedure and maintenance requirements of the equipment.

B. The schedule of all services provided shall be in accordance with a schedule approved by the Owner.

3.05 Cleaning

Prior to acceptance of the work of this section, thoroughly clean all installed materials, equipment and related areas.

END OF SECTION

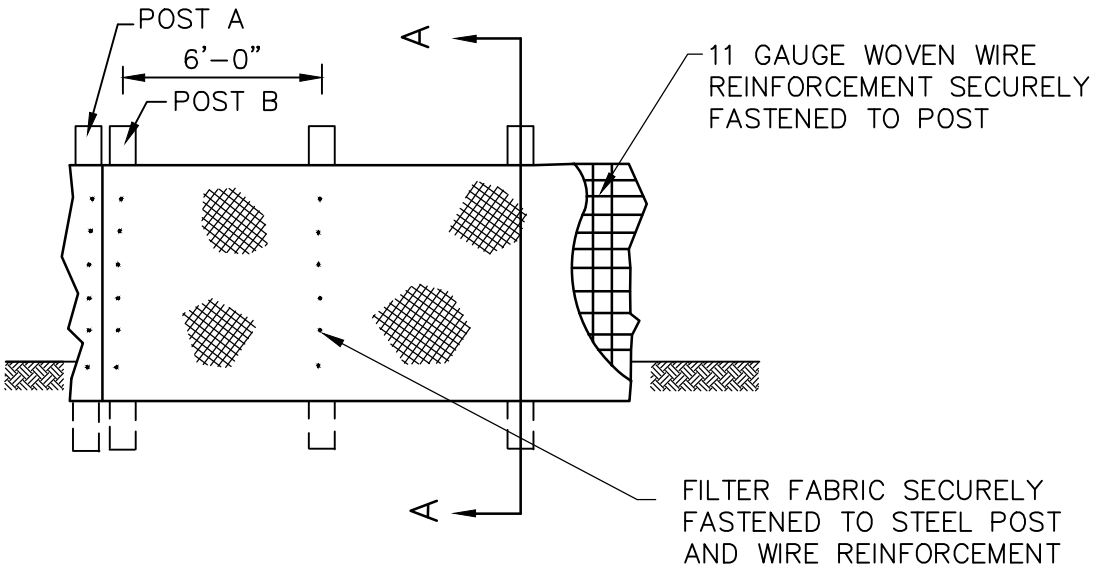

ELEVATION

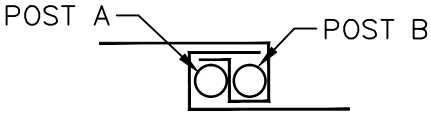

JOINING DETAIL

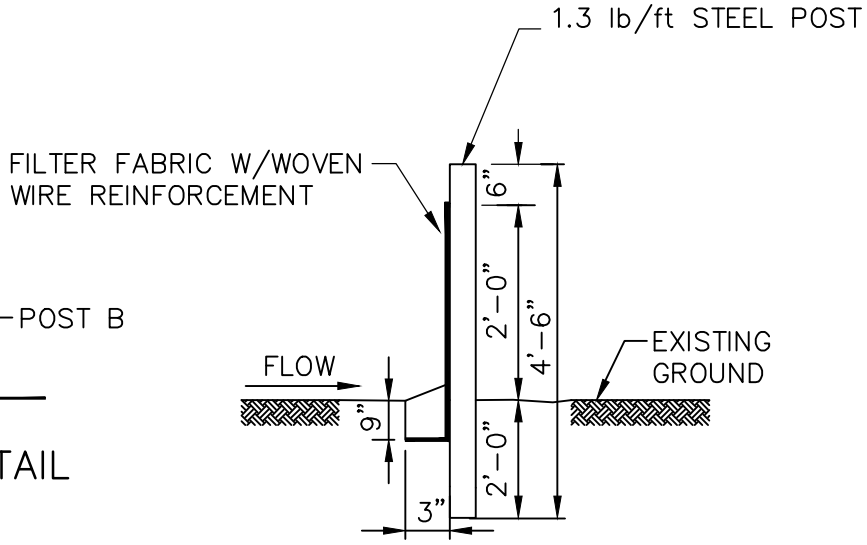

SECTION A–A

TYPE "C" REINFORCED SILT FENCE

CITY OF PORTLAND, TN	CITY OF PORTLAND	DATE : JULY 2013 SCALE : N.T.S.
	STANDARD DETAILS	G–01

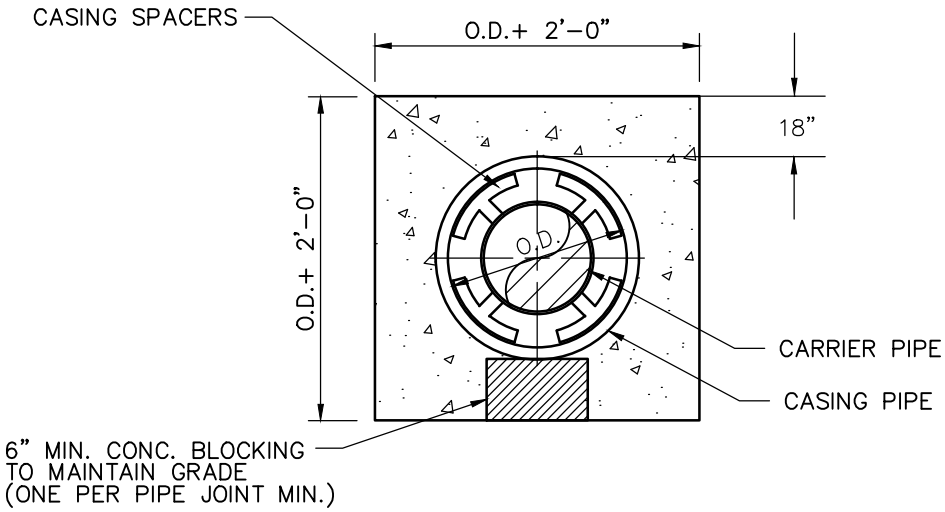

CONCRETE ENCASEMENT DETAIL

CITY OF PORTLAND, TN Home of the STRAWBERRY FESTIVAL	CITY OF PORTLAND	DATE : JULY 2013 SCALE : N.T.S.
	STANDARD DETAILS	G-02

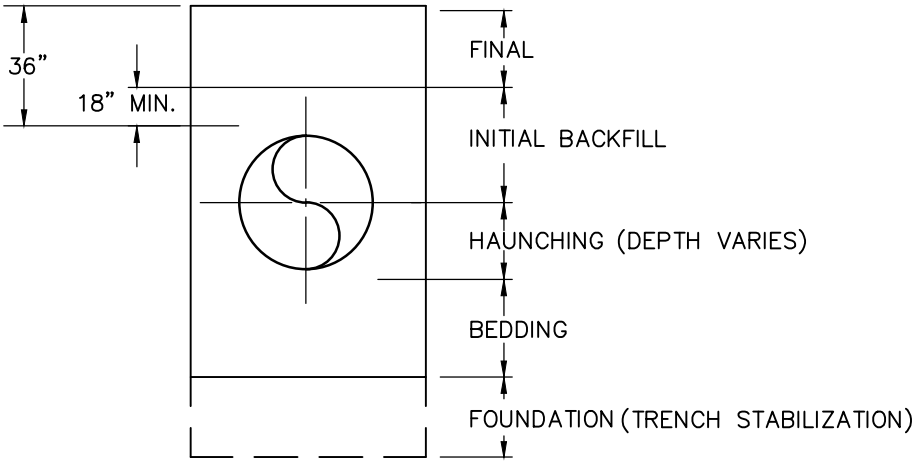

NOTE: SEE SPECIFICATIONS AND PIPE BEDDING AND HAUNCHING DETAILS FOR DIMENSIONS AND MATERIALS

TRENCH TERMINOLOGY DETAIL

CITY OF PORTLAND, TN Home of the STRAWBERRY FESTIVAL	CITY OF PORTLAND	DATE : JULY 2013 SCALE : N.T.S.
	STANDARD DETAILS	G-03

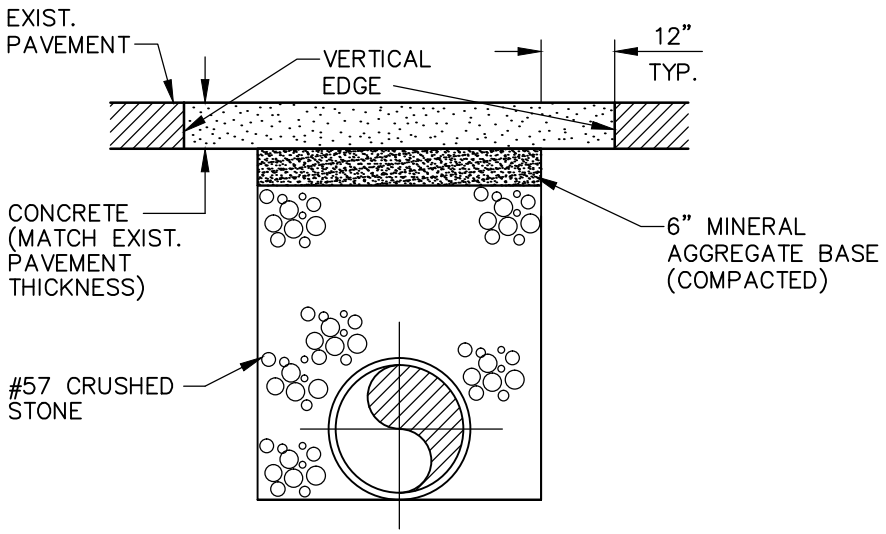

CONCRETE REPLACEMENT DETAIL

CITY OF PORTLAND, TN	CITY OF PORTLAND	DATE : JULY 2013 SCALE : N.T.S.
	STANDARD DETAILS	G-04

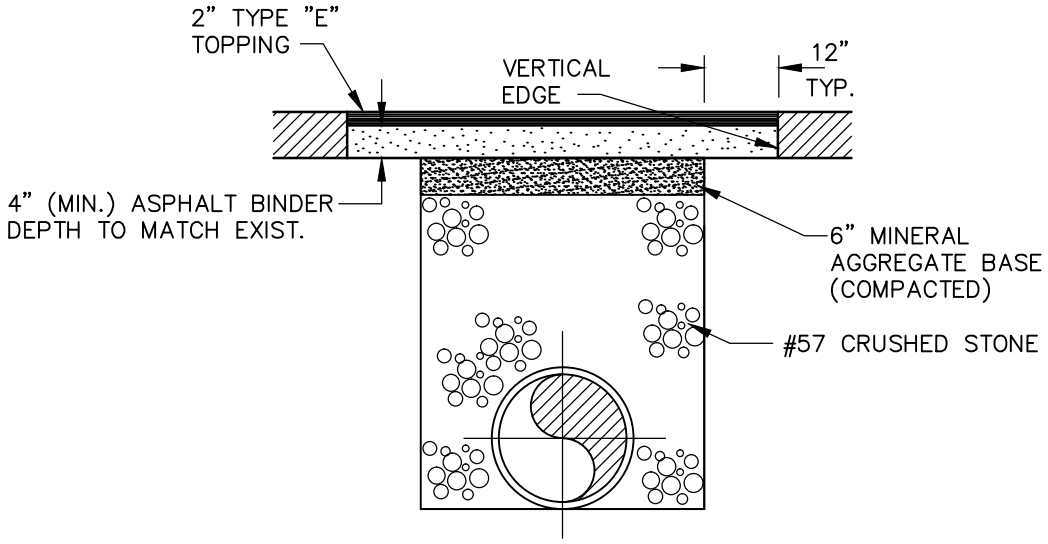

ASPHALT REPLACEMENT DETAIL

CITY OF PORTLAND, TN Proud, Progressive Portland Home of the STRAWBERRY FESTIVAL	CITY OF PORTLAND	DATE : JULY 2013 SCALE : N.T.S.
	STANDARD DETAILS	G-05

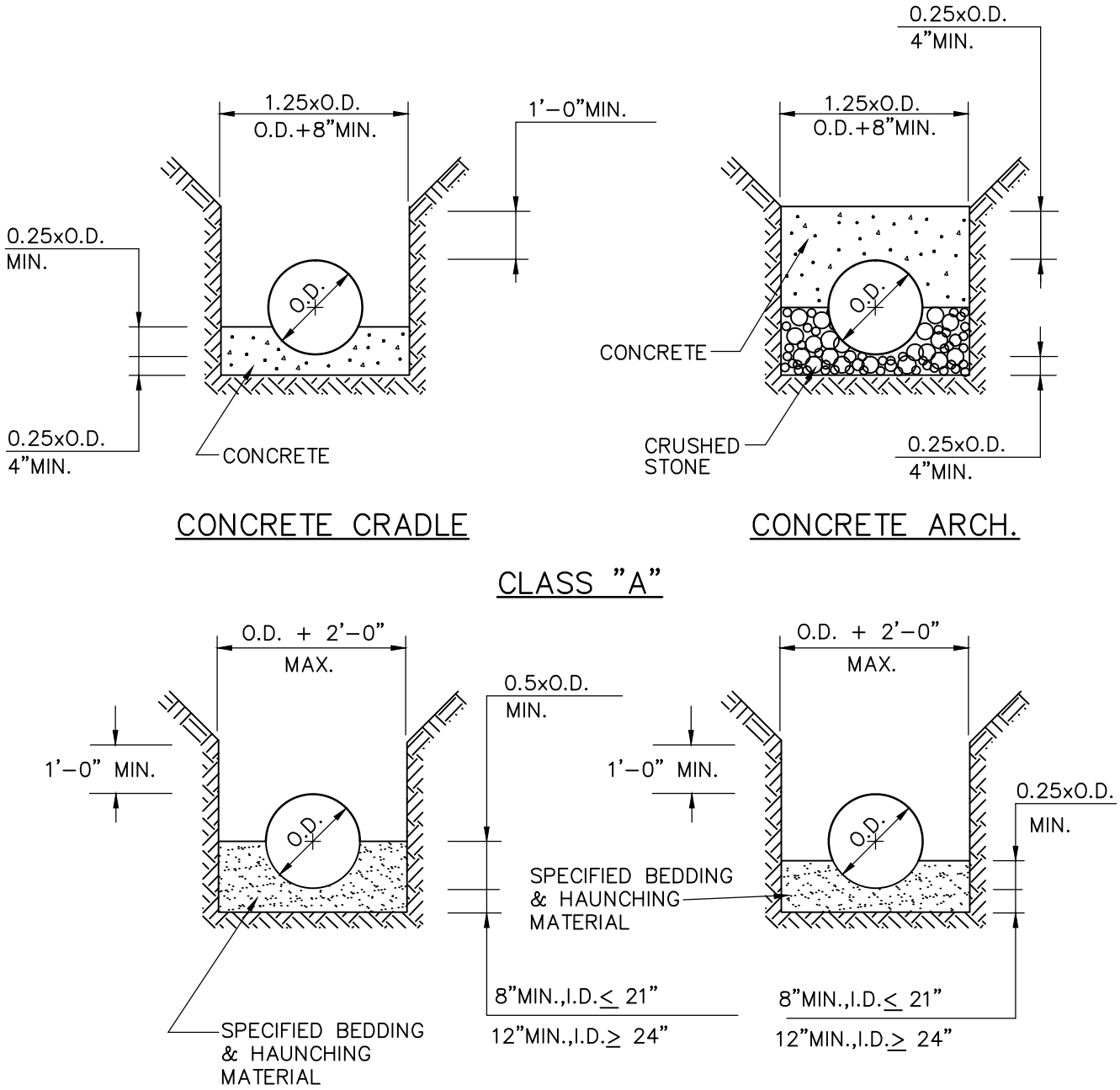

PIPE BEDDING AND HAUNCHING DETAILS

CITY OF PORTLAND, TN Proud, Progressive Portland Home of the STRAWBERRY FESTIVAL	CITY OF PORTLAND	DATE : JAN 2015 SCALE : N.T.S.
	STANDARD DETAILS	G-06

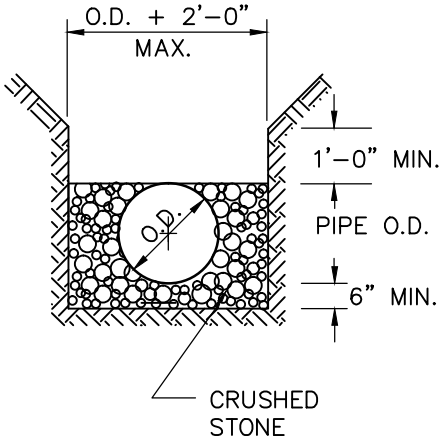

TYPE 5

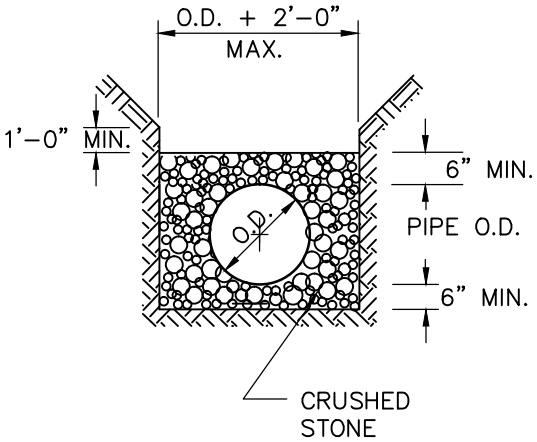

SPECIAL CONDITION

PIPE BEDDING AND HAUNCHING DETAILS

CITY OF PORTLAND, TN Proud, Progressive Portland Home of the STRAWBERRY FESTIVAL	CITY OF PORTLAND	DATE : JAN 2015 SCALE : N.T.S.
	STANDARD DETAILS	G-07

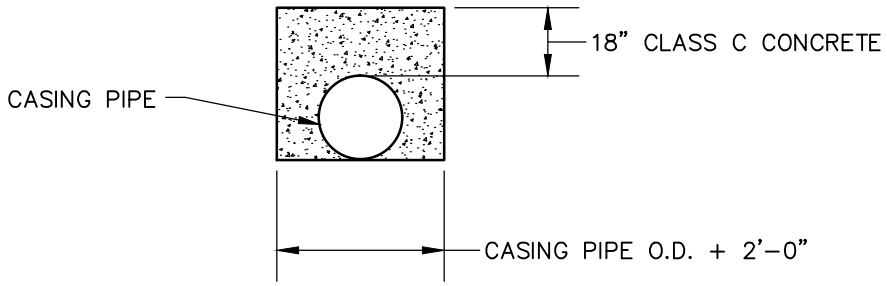

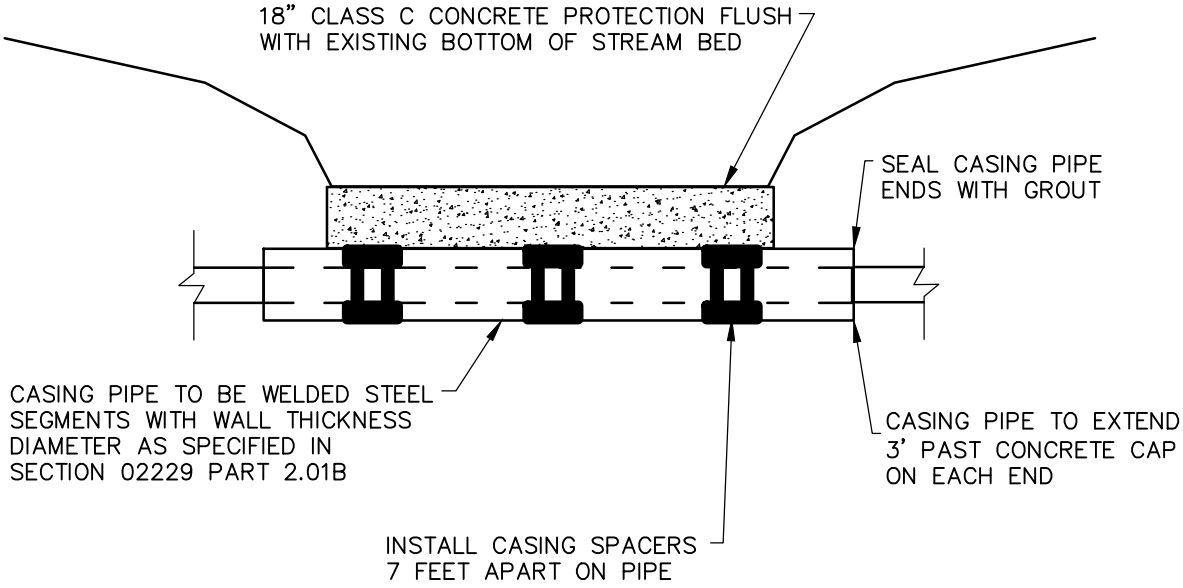

CASING PIPE AND CONCRETE PROTECTION FOR STREAMS OR LARGE DRAINAGE CHANNELS

CITY OF PORTLAND, TN Proud, Progressive Portland Home of the STRAWBERRY FESTIVAL	CITY OF PORTLAND	DATE : JULY 2013 SCALE : N.T.S.
	STANDARD DETAILS	G-08

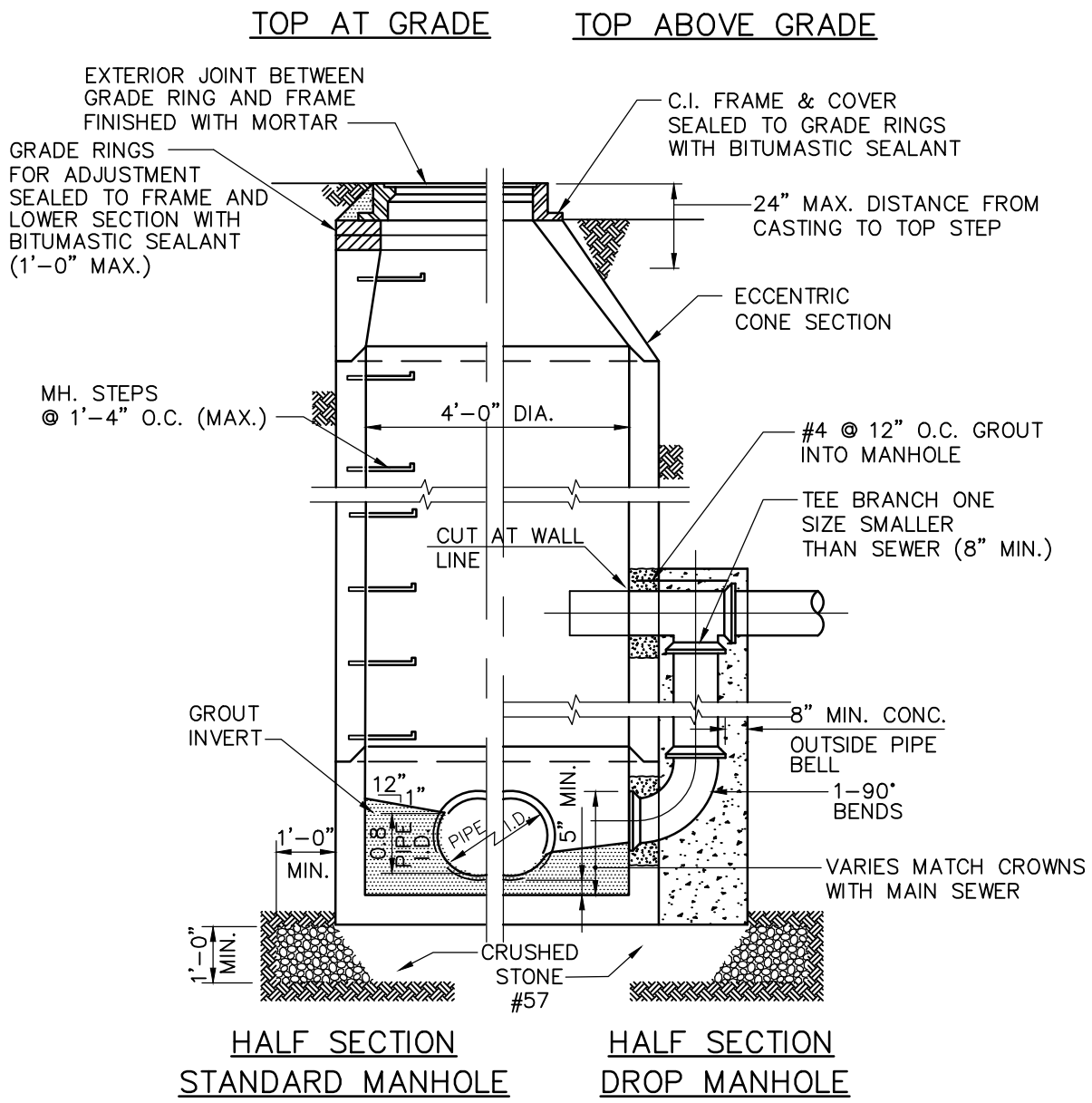

PRECAST CONCRETE MANHOLE DETAIL

CITY OF PORTLAND, TN	CITY OF PORTLAND	DATE : JULY 2013 SCALE : N.T.S.
	STANDARD DETAILS	WW-01

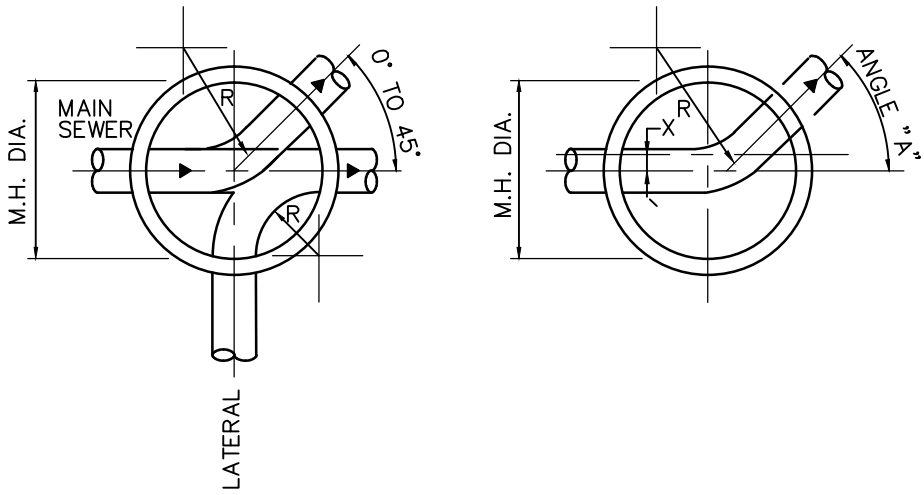

STANDARD MANHOLE SCHEDULE OF GOVERNING DIMENSIONS				
PIPE SIZE	ANGLE "A"	MH. DIA.		
8" TO 12"	0° TO 90°	4'-0"		

NOTE:

MINIMUM ℄ RADIUS (R) OF M.H. INVERT
= 1.5 x PIPE DIAMETER

TYPICAL PLANS

STANDARD MANHOLE DETAIL

N.T.S.

CITY OF PORTLAND, TN — Home of the STRAWBERRY FESTIVAL	CITY OF PORTLAND	DATE : JULY 2013 SCALE : N.T.S.
	STANDARD DETAILS	WW-02

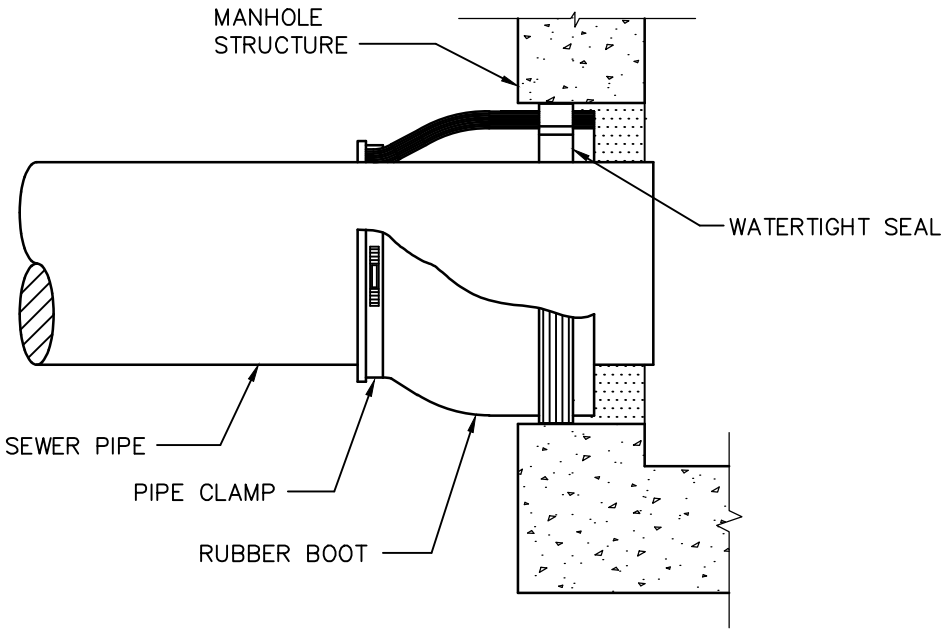

RUBBER BOOT DETAIL

CITY OF PORTLAND, TN Proud, Progressive Portland Home of the STRAWBERRY FESTIVAL	CITY OF PORTLAND	DATE : JULY 2013 SCALE : N.T.S.
	STANDARD DETAILS	WW–03

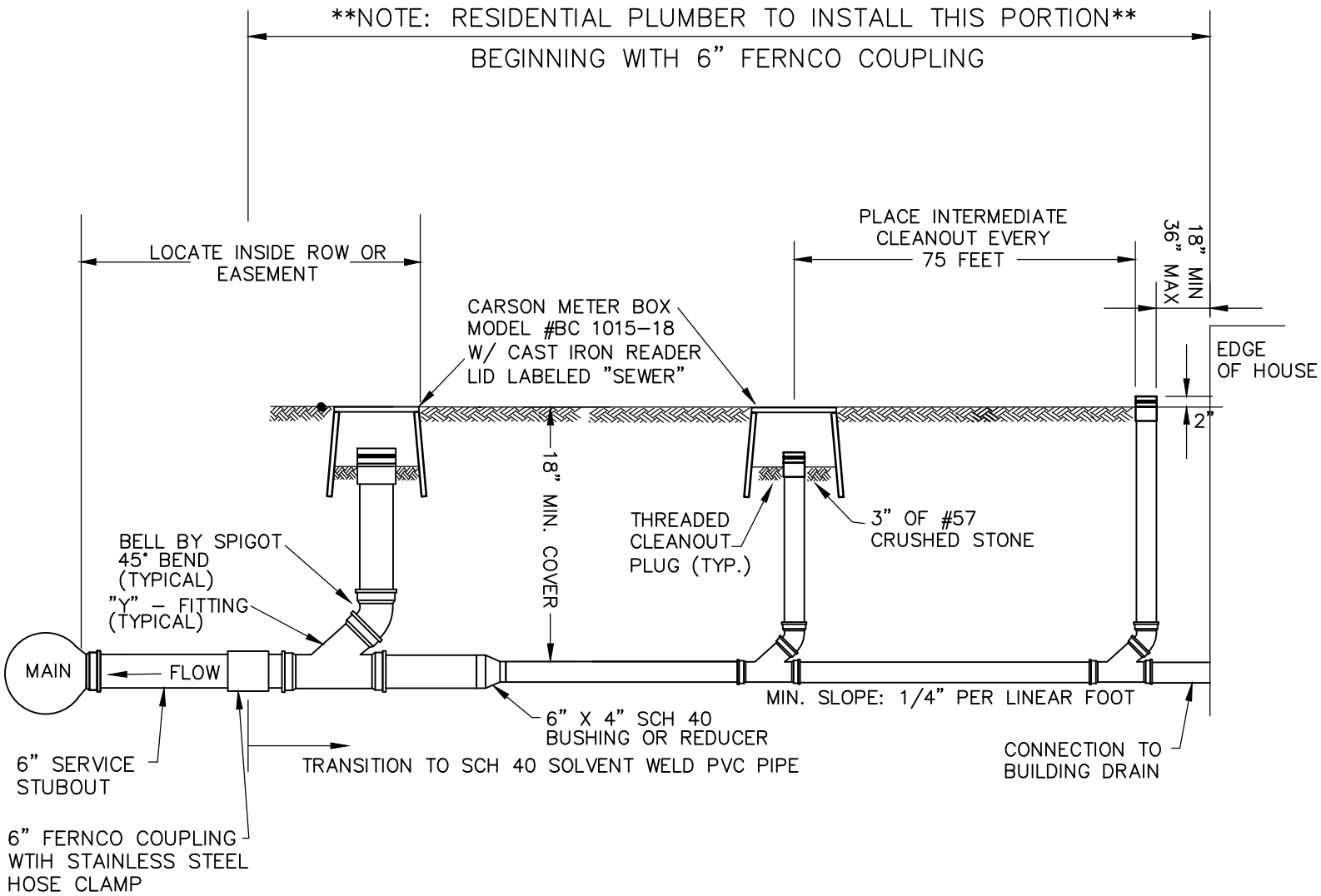

GRAVITY SEWER SERVICE BUILDING PLUMBING CONNECTION DETAIL

CITY OF PORTLAND

STANDARD DETAILS

DATE : JULY 2013
SCALE : N.T.S.

WW-04

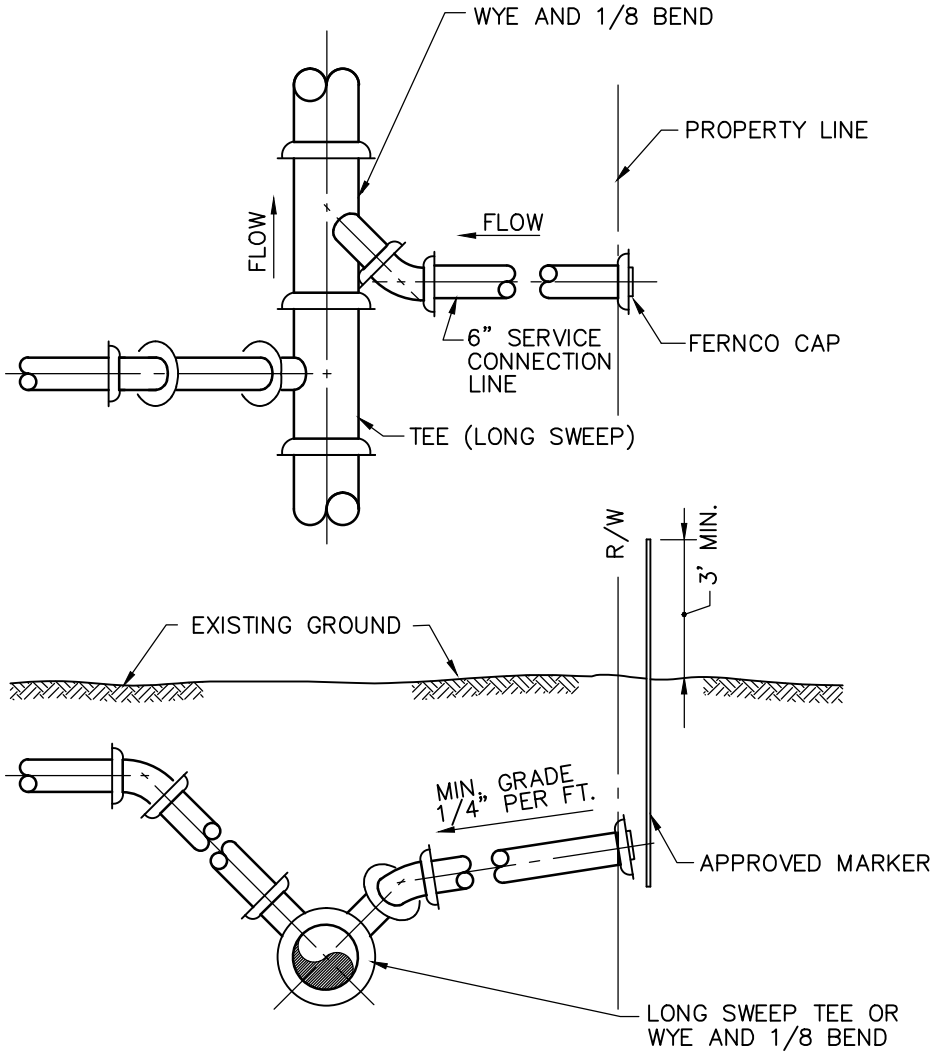

GRAVITY SEWER SERVICE STUB-OUT DETAIL

CITY OF PORTLAND, TN — Proud, Progressive Portland — House of the STRAWBERRY FESTIVAL	CITY OF PORTLAND	DATE : JULY 2013 SCALE : N.T.S.
	STANDARD DETAILS	WW-05

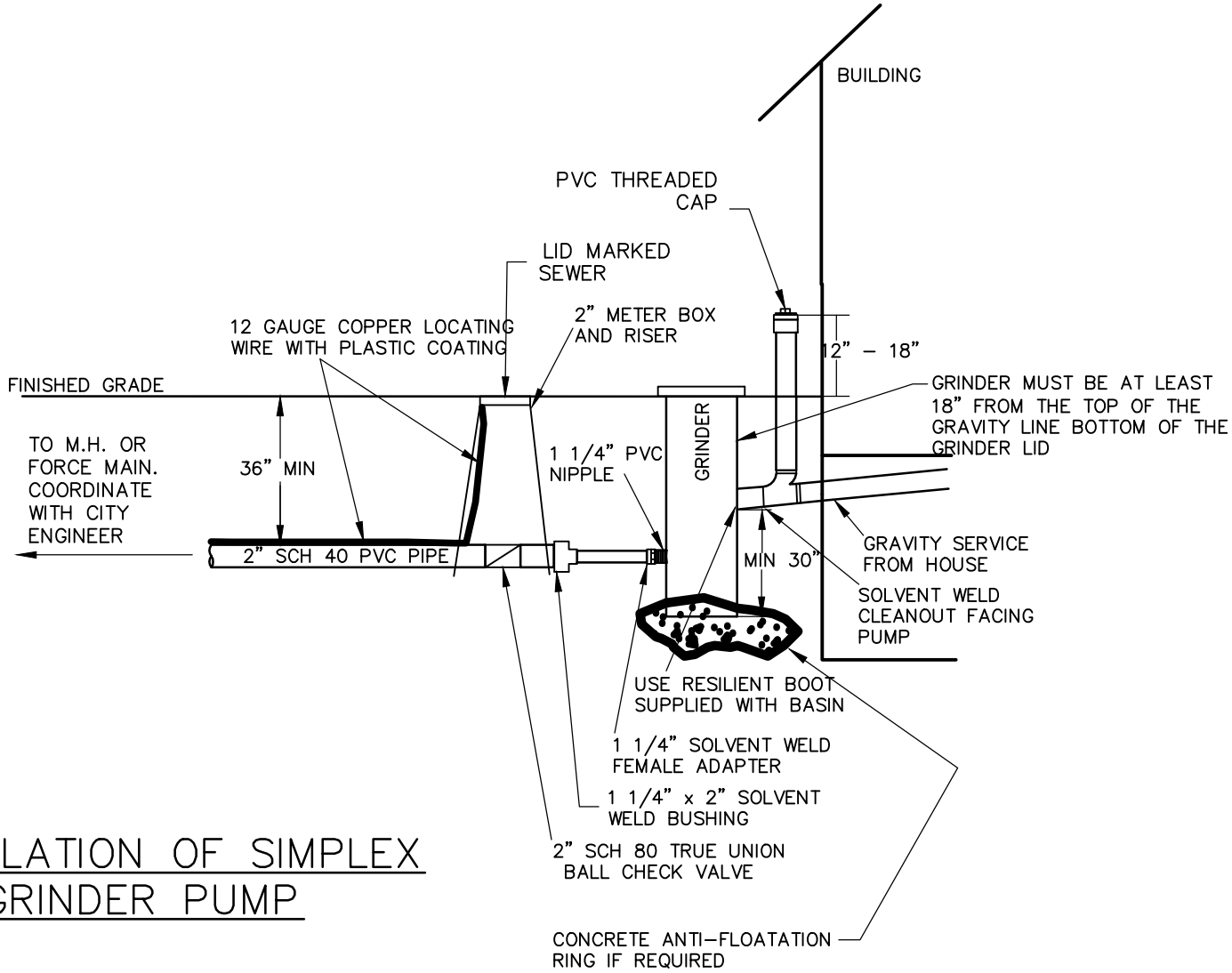

INSTALLATION OF SIMPLEX GRINDER PUMP

CITY OF PORTLAND, TN	CITY OF PORTLAND	DATE : JULY 2013 SCALE : N.T.S.
	STANDARD DETAILS	WW–06

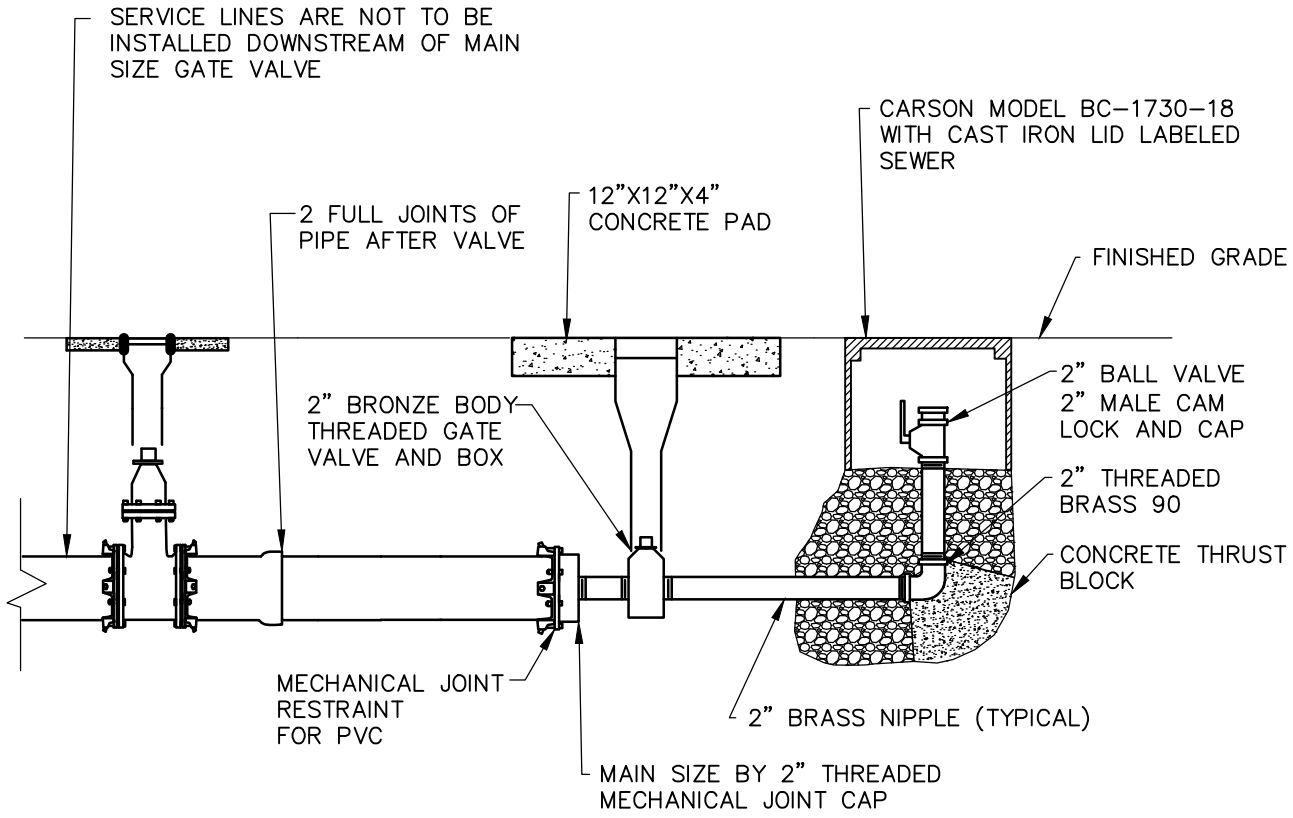

NOTE: ALL BRASS NIPPLES MUST BE 12" MIN. IN LENGTH

FORCE MAIN DEAD END ASSEMBLY
MAINS 4" AND LARGER

CITY OF PORTLAND, TN	CITY OF PORTLAND	DATE : JULY 2013 SCALE : N.T.S.
	STANDARD DETAILS	WW-07

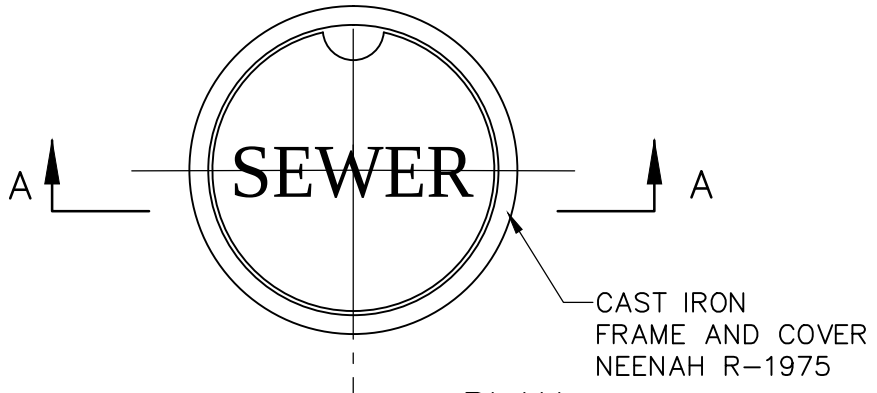

PLAN

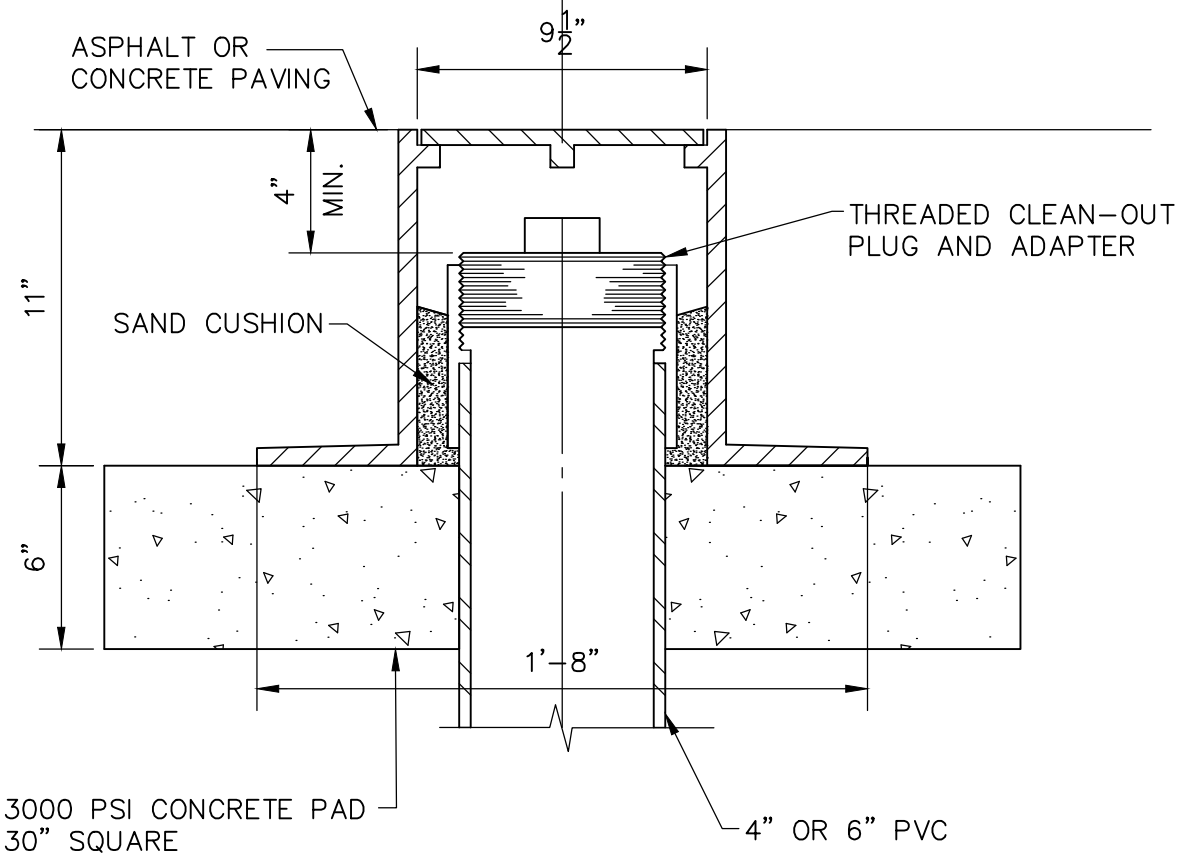

SECTION A-A

TRAFFIC AREA CLEAN-OUT

CITY OF PORTLAND, TN	CITY OF PORTLAND	DATE : JULY 2013 SCALE : N.T.S.
	STANDARD DETAILS	WW-08

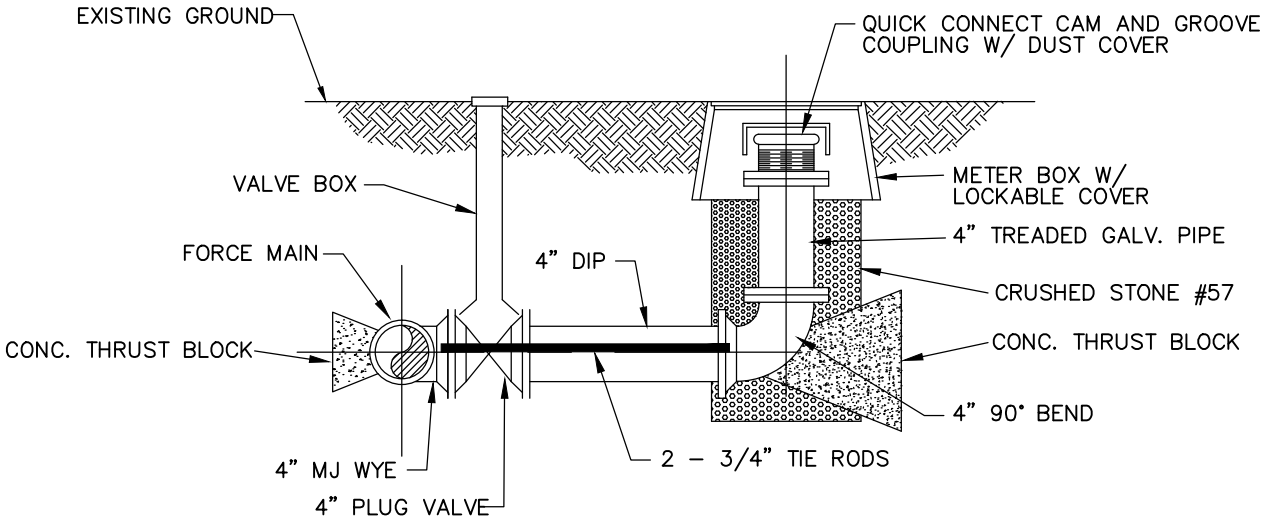

TYPICAL PUMP STATION BYPASS CONNECTION

CITY OF PORTLAND, TN	CITY OF PORTLAND	DATE : JULY 2013 SCALE : N.T.S.
	STANDARD DETAILS	WW–09

NOTE: 3/4" AND 1" METERS FURNISHED BY CITY OF PORTLAND

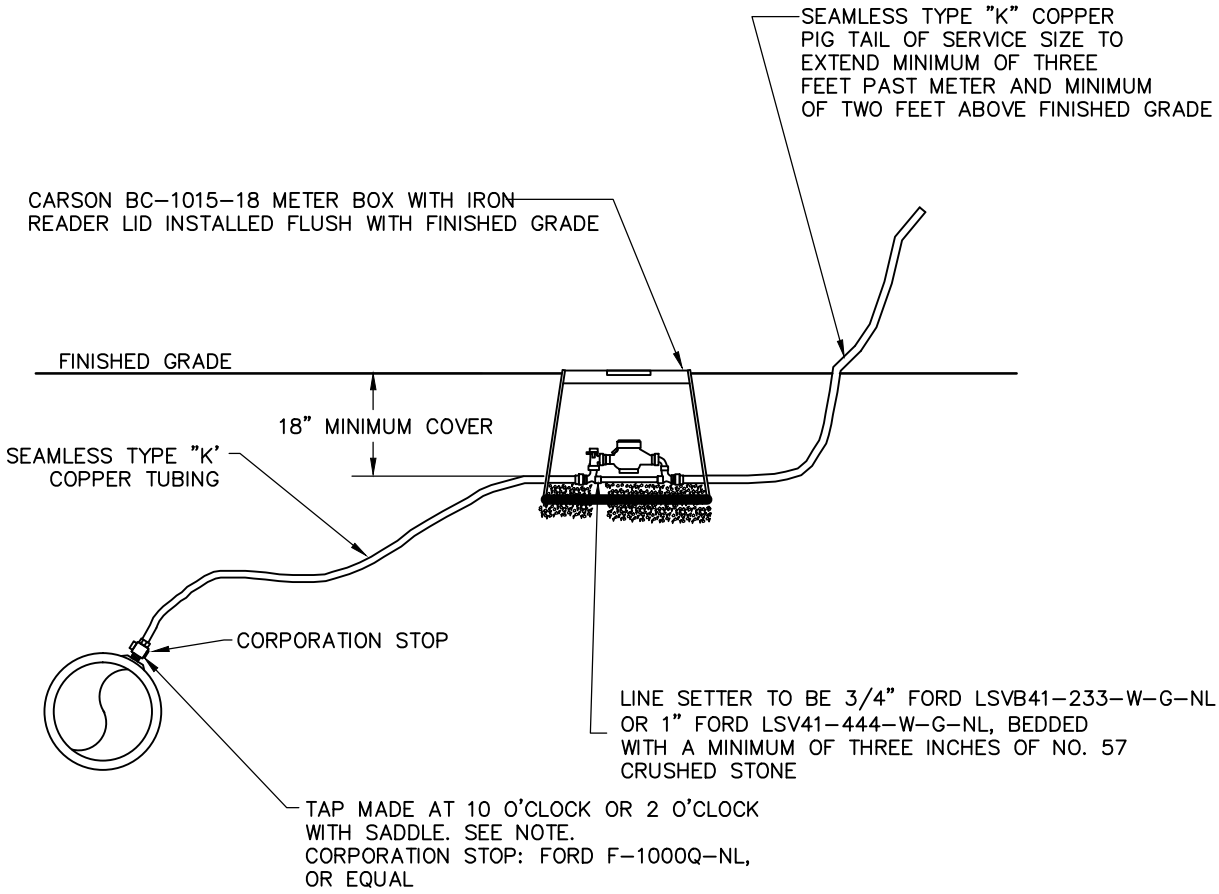

NOTE: USE FORD SINGLE STRAP BRASS SADDLES FOR SDR PIPE
USE FORD DOUBLE STRAP BRASS SADDLES FOR C900 AND DIP

3/4" AND 1" SHORT TAP ASSEMBLIES

CITY OF PORTLAND, TN	CITY OF PORTLAND	DATE : JULY 2013 SCALE : N.T.S.
	STANDARD DETAILS	W-01

NOTE: 2" METERS FURNISHED BY CITY OF PORTLAND

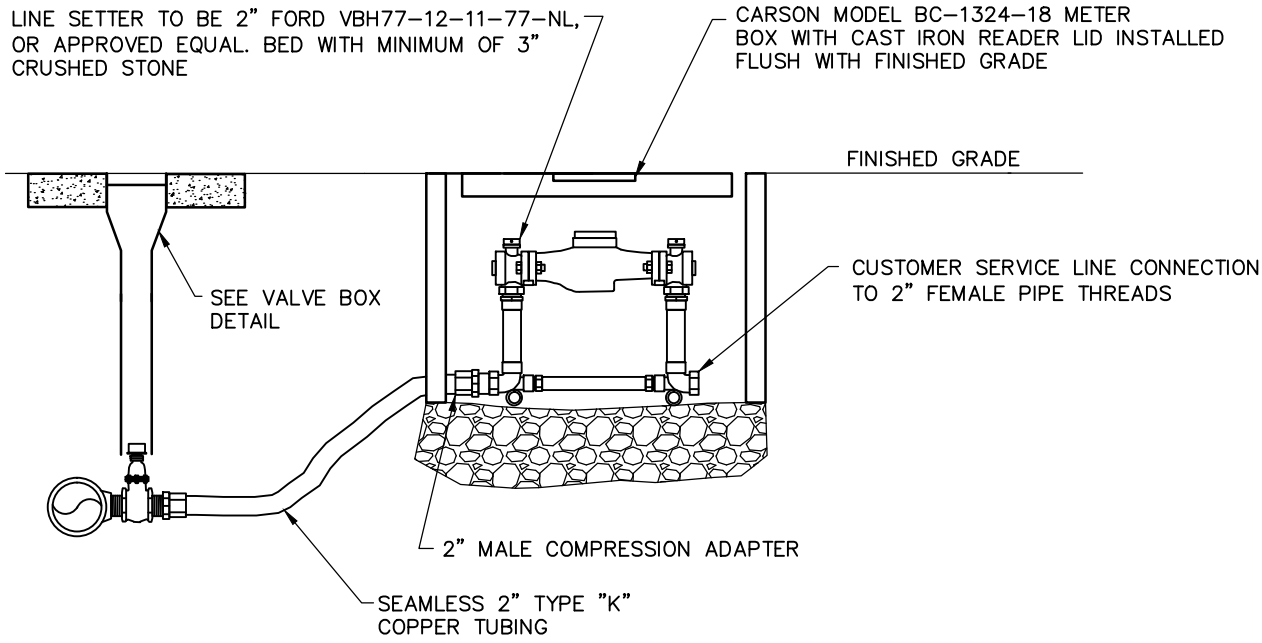

2" TAP CONSISTING OF:

- 2" SMITH BLAIR DOUBLE STRAP SADDLE OR APPROVED EQUAL
- 2" X CLOSE NIPPLE
- 2" BRONZE BODY THREADED GATE VALVE
- 2" MALE COMPRESSION ADAPTER

2" SHORT TAP ASSEMBLIES

CITY OF PORTLAND, TN	CITY OF PORTLAND	DATE : JULY 2013 SCALE : N.T.S.
	STANDARD DETAILS	W-02

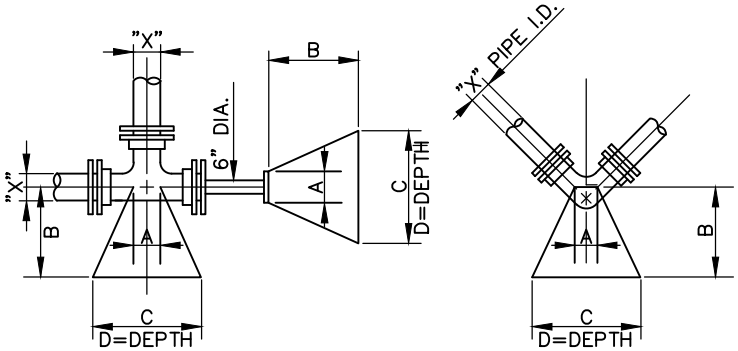

200 PSI TEST PRESSURE
2000 PSF SOIL BEARING

BLOCKING DIMENSIONS						
		X*	A	B	C	D
DEAD END & TEES		10"	1'–0"	2'–6"	4'–0"	2'–6"
		8"	0'–10"	2'–3"	3'–3"	2'–0"
		6"	0'–8"	1'–6"	2'–6"	1'–6"
BENDS	90°	10"	1'–0"	3'–6"	5'–0"	2'–9"
		8"	0'–10"	2'–9"	4'–0"	2'–3"
		6"	0'–8"	2'–0"	3'–0"	1'–9"
	45°	10"	1'–0"	1'–9"	3'–0"	2'–6"
		8"	0'–10"	1'–6"	2'–6"	2'–0"
		6"	0'–8"	1'–3"	2'–0"	1'–6"
	22 1/2°	10"	1'–0"	1'–4"	2'–6"	1'–6"
		8"	0'–10"	1'–0"	2'–0"	1'–3"
		6"	0'–8"	0'–9"	1'–6"	1'–0"
	11 1/4°	10"	1'–0"	0'–6"	1'–6"	1'–3"
		8"	0'–10"	0'–6"	1'–4"	1'–0"
		6"	0'–8"	0'–6"	1'–0"	0'–9"

X* = DIAMETER OF PIPE TO BE BLOCKED

TYPICAL BLOCKING DETAIL

CITY OF PORTLAND, TN	CITY OF PORTLAND	DATE : JULY 2013 SCALE : N.T.S.
	STANDARD DETAILS	W–03

NOTES:

1) REDUCED PRESSURE PRINCIPLE BACKFLOW PREVENTION ASSEMBLY SHALL COMPLY WITH ASSE 1013 & AWWA C511.
2) DOUBLE CHECK VALVE BACKFLOW PREVENTION ASSEMBLY SHALL COMPLY WITH ASSE 1015 & AWWA C510.
3) BACKFLOW PREVENTION ASSEMBLY SHALL BE INSTALLED WITHIN 5-FT OF THE METER BOX.
4) BACKFLOW PREVENTION ASSEMBLY SHALL BE CENTERED ON CONCRETE MOUNTING PAD AND CENTERED WITHIN ENCLOSURE.
5) MINIMUM INSULATED CLASS I OR CLASS II, ASSE 1060 WEATHERPROOF ENCLOSURE REQUIRED.
6) 120V GFCI ELECTRICAL RECEPTACLE TO BE INSTALLED IN ACCORDANCE WITH THE TN. ELECTRICAL CODE FOR OUTDOOR OPERATION.
7) INSTALLATION SHALL BE IN COMPLIANCE WITH ALL APPLICABLE TOWN ORDINANCES AND SPECIFICATIONS IN ADDITION TO THE TN. PLUMBING CODE.
8) PROPERTY OWNER SHALL BE RESPONSIBLE FOR MAINTENANCE AND OPERATION OF BACKFLOW ASSEMBLY AND COMPLIANCE WITH REPORTING AND TESTING REQUIREMENTS.
9) ALL BRASS COMPONENTS SHALL BE 'NO LEAD' BRASS MEETING UNS C89833 AS PER ASTM B584.

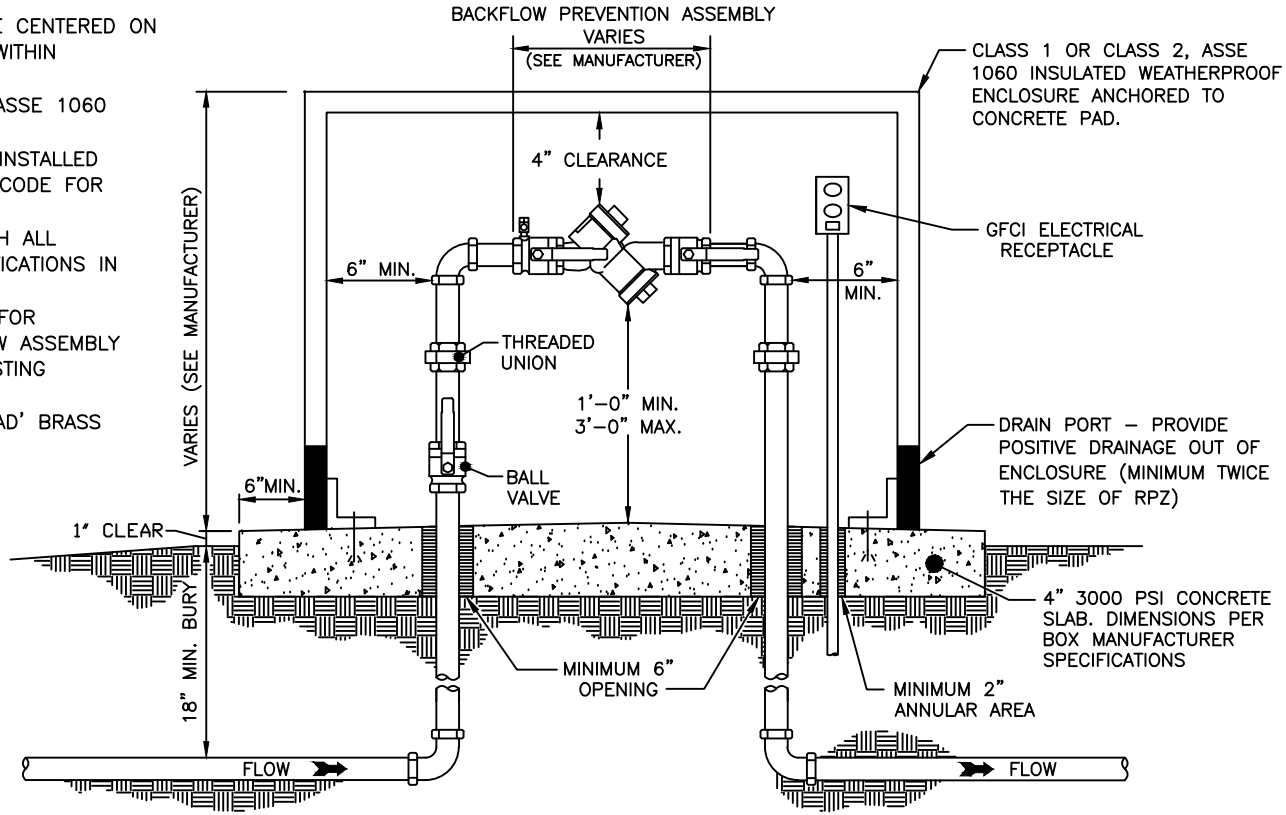

STANDARD 1" TO 2-1/2" COMMERCIAL OUTDOOR BACKFLOW ASSEMBLY

CITY OF PORTLAND, TN — Proud, Progressive Portland — Home of the STRAWBERRY FESTIVAL	CITY OF PORTLAND	DATE : JULY 2013 SCALE : N.T.S.
	STANDARD DETAILS	W-04

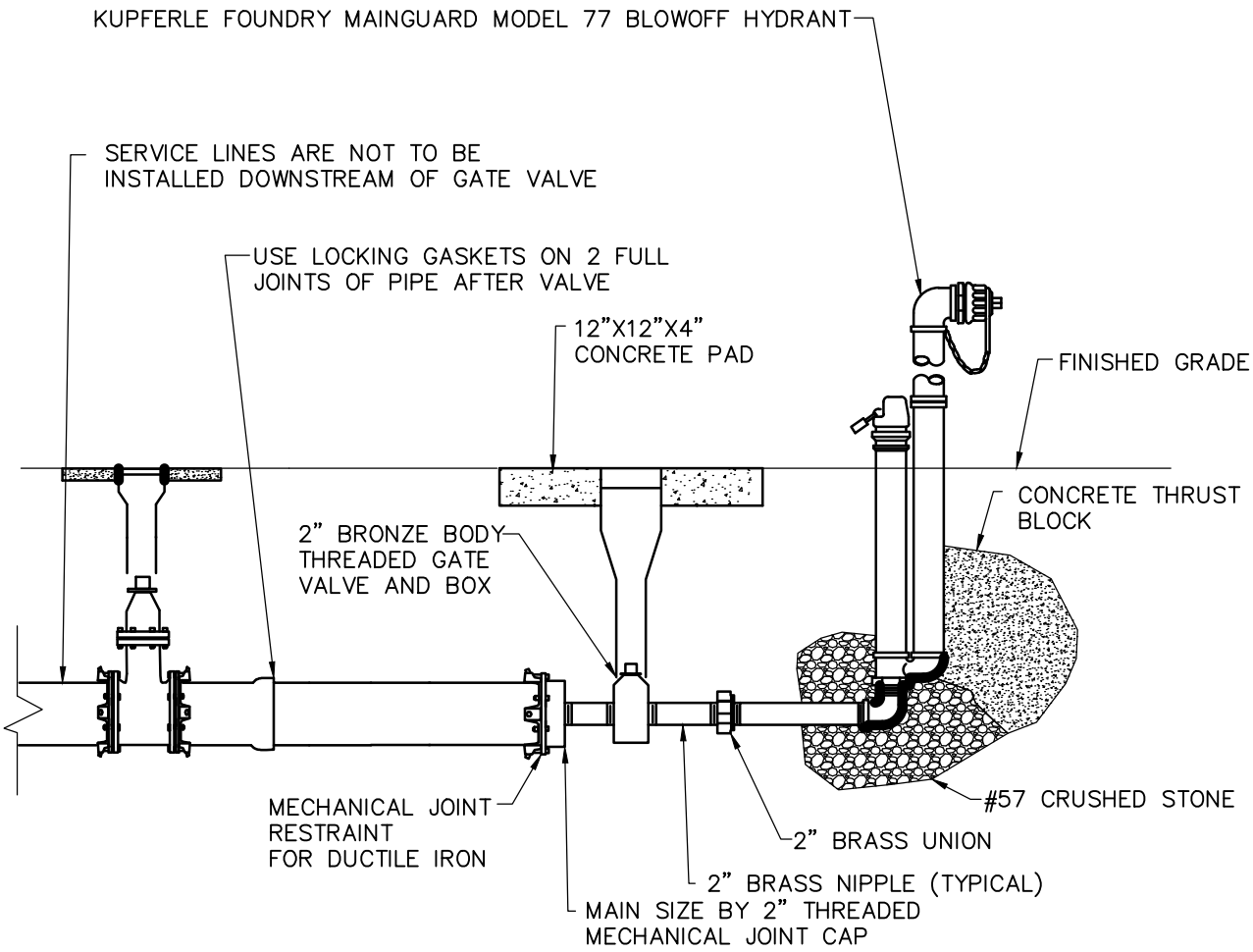

NOTE: ALL BRASS NIPPLES MUST BE 12" MIN. IN LENGTH

DEAD-END ASSEMBLY

CITY OF PORTLAND, TN	CITY OF PORTLAND	DATE : JULY 2013 SCALE : N.T.S.
	STANDARD DETAILS	W-05

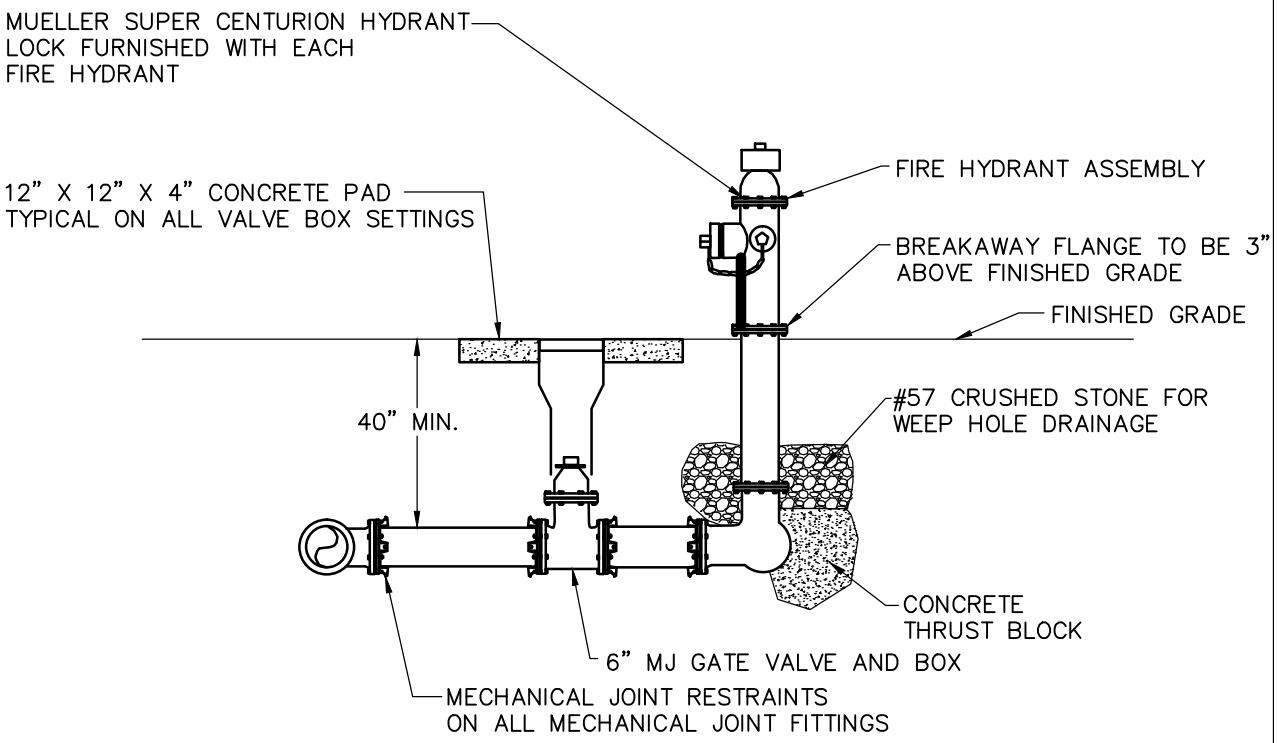

*NOTE: VALVE SHALL BE ATTACHED TO NEW MAIN USING ANCHOR (HYDRANT) TEE. VALVE SHALL BE ATTACHED TO EXISTING MAIN USING AT TAPPING SLEEVE.

FIRE HYDRANT DETAIL

CITY OF PORTLAND, TN	CITY OF PORTLAND	DATE : JULY 2013 SCALE : N.T.S.
	STANDARD DETAILS	W-06

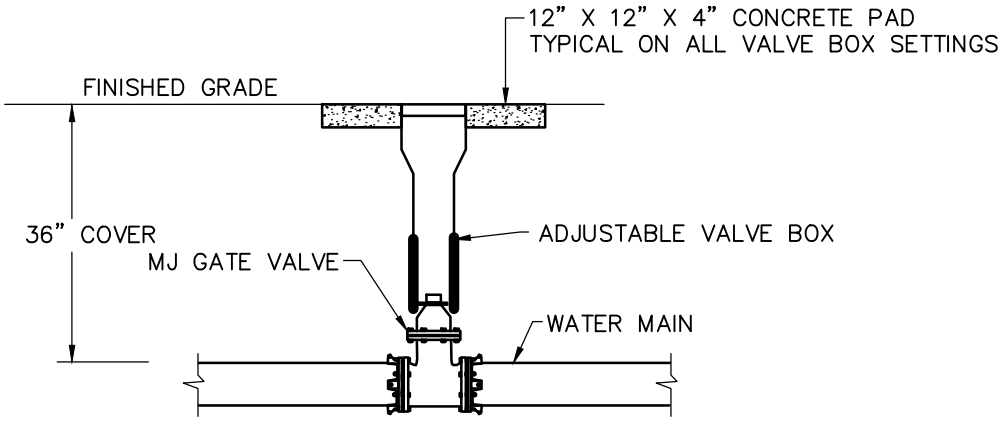

MECHANICAL JOINT RESTRAINTS FOR DUCTILE IRON PIPE

NOTE: PROVIDE VALVE STEM AND BOX EXTENSION
AS NECESSARY TO COMPLY WITH SEC. 2.04B

GATE VALVE INSTALLATION DETAIL

CITY OF PORTLAND, TN Proud, Progressive Portland Home of the STRAWBERRY FESTIVAL	CITY OF PORTLAND	DATE : JULY 2013 SCALE : N.T.S.
	STANDARD DETAILS	W-07

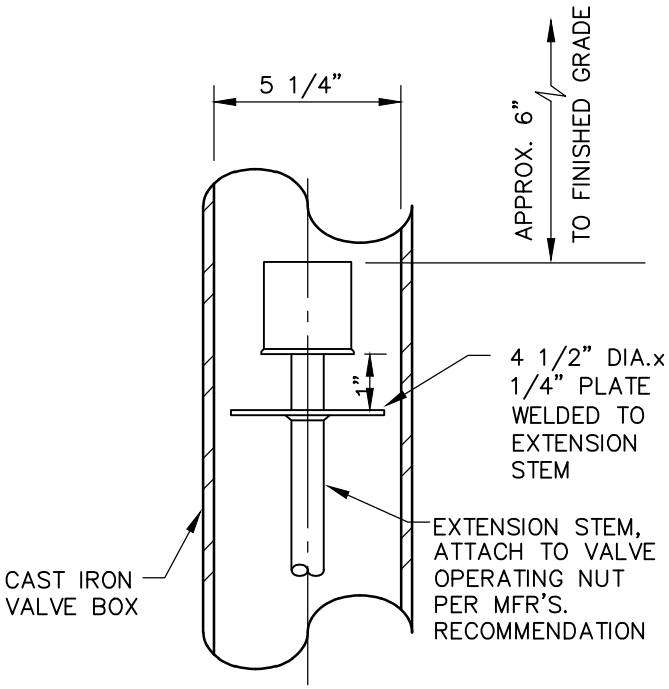

EXTENSION STEM DETAIL

CITY OF PORTLAND, TN	CITY OF PORTLAND	DATE : JULY 2013 SCALE : N.T.S.
	STANDARD DETAILS	W-08

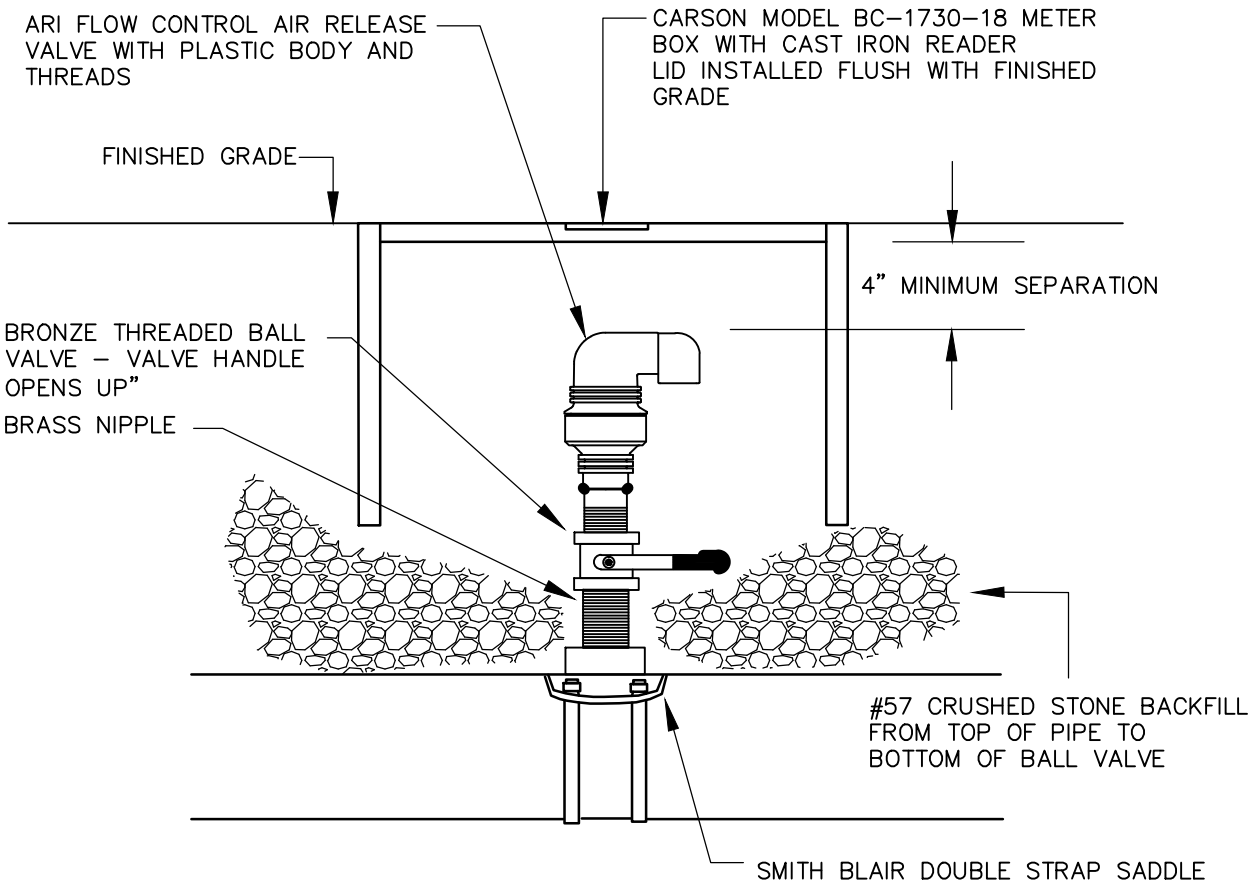

3/4" - 2" AIR RELEASE VALVE ASSEMBLIES

CITY OF PORTLAND, TN	CITY OF PORTLAND	DATE : JULY 2013 SCALE : N.T.S.
	STANDARD DETAILS	W-09

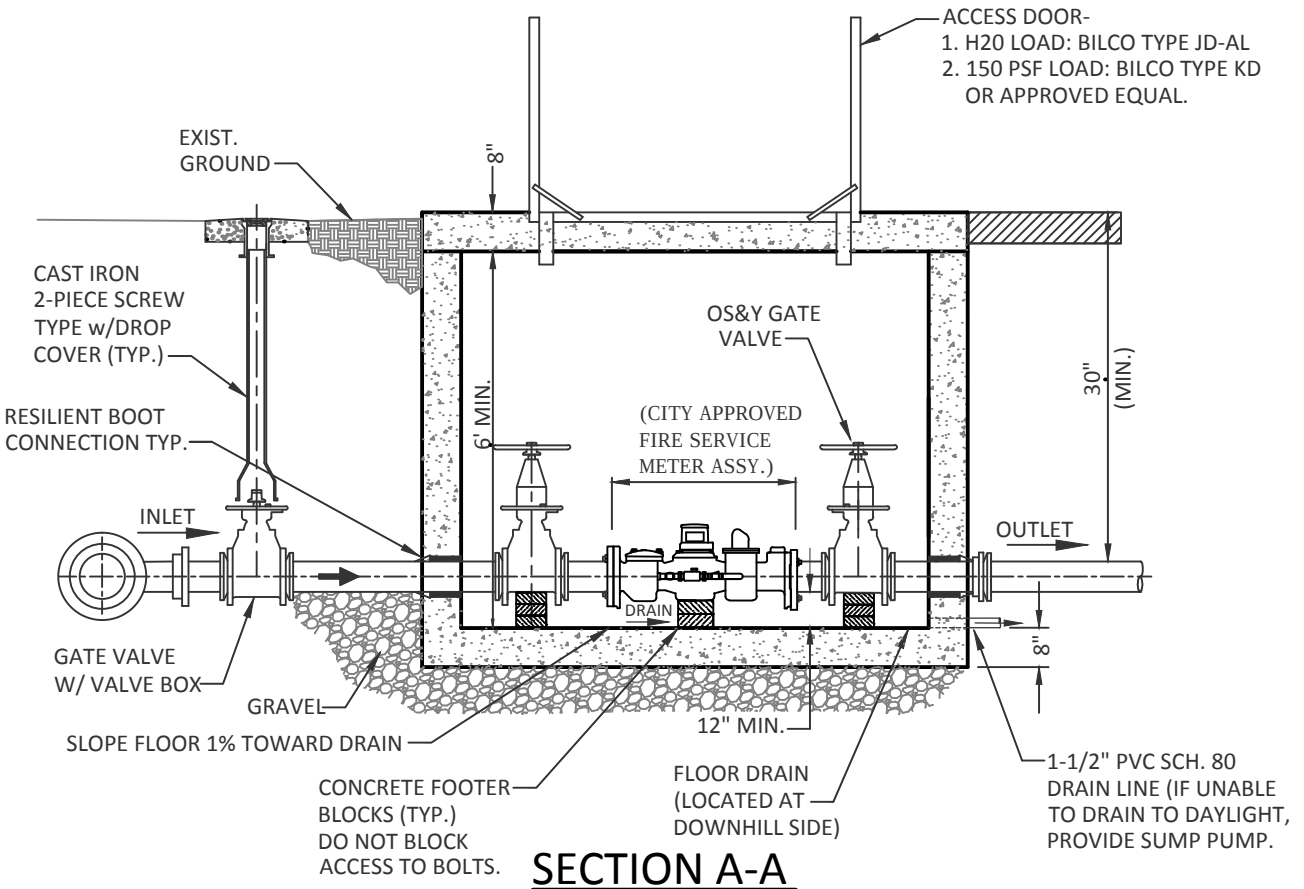

SECTION A-A

DIA. (IN.)	L (IN.)	W (IN.)	MAX. FLOW (GPM)	ACCESS DOOR (FT)
4	60	48	500	4x4
6	72	48	1,200	4x4
8	84	60	1,500	4x6

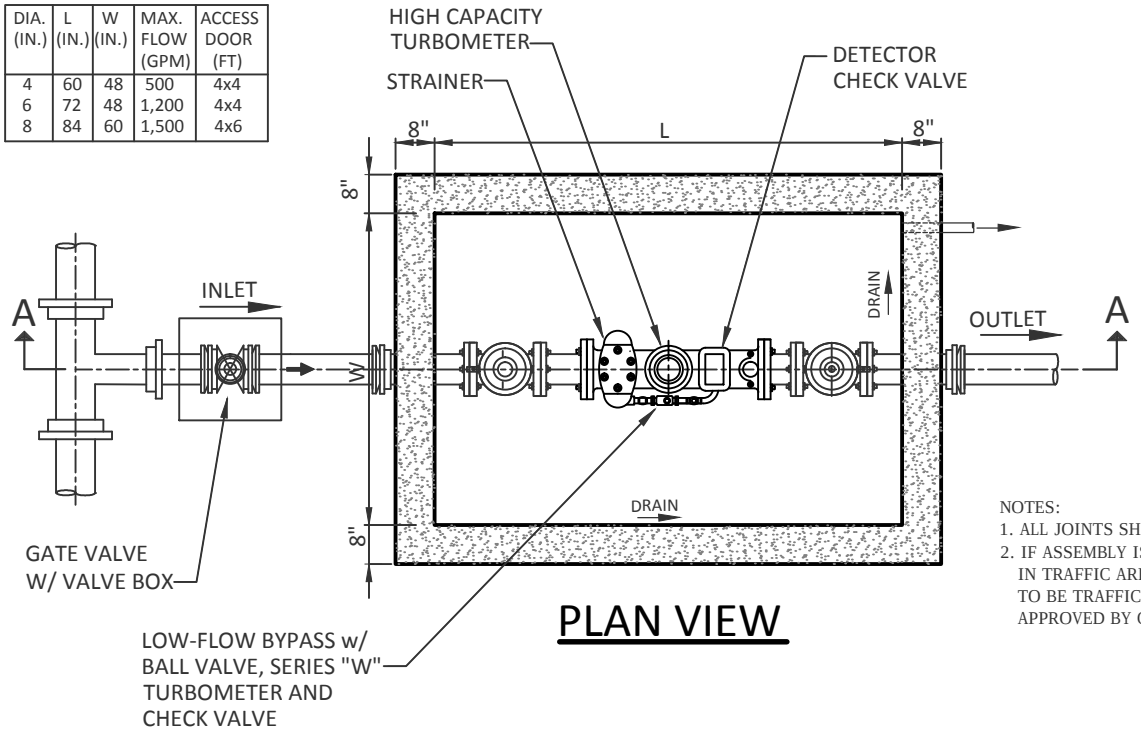

PLAN VIEW

NOTES:
1. ALL JOINTS SHALL BE MEGALUGS.
2. IF ASSEMBLY IS TO BE INSTALLED IN TRAFFIC AREA, BOX & COVER TO BE TRAFFIC BEARING AS APPROVED BY CITY OF PORTLAND.

CITY OF PORTLAND, TN — Proud, Progressive Portland — Home of the STRAWBERRY FESTIVAL	CITY OF PORTLAND	DATE: JAN. 2015 SCALE: N.T.S.
	4"TO 8" FIRE SERVICE METER VAULT	W-10

Jacobs Engineering Group Inc.
One Vantage Way, Suite B-400
Nashville, Tennessee 37228
t 615.254.6002 f 615.254.6073
www.jacobs.com